GENERAL NOTES

1. ALL CONSTRUCTION, INCLUDING MATERIAL AND WORKMANSHIP, SHALL CONFORM TO THE PROVISIONS OF THE 2019 EDITION OF THE "CALIFORNIA BUILDING CODE" (CBC) WITH THE GOVERNING AGENCY AMENDMENTS, AND STANDARDS REFERENCED THEREIN. WHEREVER CODE OR CALIFORNIA BUILDING CODE (CBC) IS REFERENCED IN THE FOLLOWING GENERAL NOTES OR OTHER NOTE SECTIONS, IT SHALL IMPLY THE CBC CODE WITH GOVERNING AGENCY AMENDMENTS.
2. ALL ASTM STANDARDS LISTED HEREIN, SHALL BE AS REFERENCED IN THE LATEST ISSUE OF THE ANNUAL BOOK OF STANDARDS OF THE AMERICAN SOCIETY FOR TESTING AND MATERIALS.
3. THE CONTRACTOR SHALL VERIFY ALL DIMENSIONS, ELEVATIONS AND SITE CONDITIONS BEFORE STARTING WORK. THE DESIGNER AND STRUCTURAL ENGINEER SHALL IMMEDIATELY BE NOTIFIED, IN WRITING, OF ANY DISCREPANCIES.
4. ALL OMISSIONS AND/OR CONFLICTS BETWEEN THE VARIOUS ELEMENTS OF THE WORKING DRAWINGS AND SPECIFICATIONS SHALL BE BROUGHT TO THE ATTENTION OF THE FIELD INSPECTOR, AND A SOLUTION GIVEN BY, THE DESIGNER AND STRUCTURAL ENGINEER PRIOR TO PROCEEDING WITH ANY WORK AFFECTED BY THE CONFLICT OR OMISSION.
5. IN CASE OF CONFLICT, NOTES AND DETAILS OF THESE STRUCTURAL DRAWINGS SHALL TAKE PRECEDENCE OVER THE "GENERAL NOTES" AND/OR "STANDARD DETAILS". TYPICAL DETAILS SHALL BE USED WHENEVER APPLICABLE.
6. IF A SPECIFIC DETAIL IS NOT SHOWN FOR ANY PART OF THE WORK, THE CONSTRUCTION SHALL BE THE SAME AS FOR SIMILAR WORK.
7. WORKING DIMENSIONS SHALL NOT BE SCALED FROM PLANS, SECTIONS OR DETAILS ON THESE STRUCTURAL DRAWINGS.
8. THE CONTRACTOR SHALL PROVIDE AND MAINTAIN ADEQUATE ERECTION SHORING AND BRACING AS REQUIRED FOR STABILITY OF THE STRUCTURE DURING ALL PHASES OF CONSTRUCTION. THESE DRAWINGS REPRESENT THE FINISHED STRUCTURE AND DO NOT INDICATE THE METHOD OF CONSTRUCTION.
9. PIPES, DUCTS, SLEEVES, OPENINGS, POCKETS, CHASES, BLOCK-OUTS, ETC., SHALL NOT BE PLACED IN SLABS, BEAMS, GIRDERS, COLUMNS, WALLS, FOUNDATIONS, ETC., NOR SHALL ANY STRUCTURAL MEMBER BE CUT FOR SUCH ITEMS, UNLESS SPECIFICALLY DETAILED ON THESE STRUCTURAL DRAWINGS. (IF ANY PIPES, DUCTS, ETC., DO OCCUR, THAT ARE NOT SHOWN ON THESE STRUCTURAL DRAWINGS, THE DESIGNER AND STRUCTURAL ENGINEER SHALL BE NOTIFIED.) SEE PARAGRAPH 4, ABOVE.
10. ANCHOR BOLTS OR INSERTS FOR EQUIPMENT ANCHORAGE OR INSTALLATION SHALL BE DESIGNED FOR SEISMIC CATEGORY D BY A CIVIL ENGINEER OR STRUCTURAL ENGINEER REGISTERED IN THE STATE OF CALIFORNIA AND SHALL BE SHOWN ON THE MECHANICAL OR ELECTRICAL SHOP DRAWINGS.
11. THE CONTRACTOR SHALL ASSUME SOLE AND COMPLETE RESPONSIBILITY FOR JOB SITE CONDITIONS DURING THE COURSE OF CONSTRUCTION OF THIS PROJECT, INCLUDING SAFETY OF ALL PERSONS AND PROPERTY. THIS REQUIREMENT SHALL APPLY CONTINUOUSLY AND NOT BE LIMITED TO NORMAL WORKING HOURS. THE CONTRACTOR SHALL DEFEND, INDEMNIFY, AND HOLD THE STRUCTURAL ENGINEER FREE AND HARMLESS FROM ALL CLAIMS, DEMANDS AND ALL LIABILITY, REAL OR ALLEGED, IN CONNECTION WITH THE PERFORMANCE OF WORK ON THIS PROJECT, EXCEPT FOR LIABILITY ARISING FROM THE SOLE NEGLIGENCE OF THE STRUCTURAL ENGINEER.
12. IF ANY SUBSTITUTION IS PROPOSED BY THE CONTRACTOR, NEW CALCULATIONS MAY HAVE TO BE PREPARED, THE DETAILS MAY HAVE TO BE ALTERED, AND NEW DRAWINGS MAY HAVE TO BE SUBMITTED TO THE BUILDING DEPARTMENT. THE CONTRACTOR SHALL PAY THE STRUCTURAL ENGINEER'S FEES TO ALTER THE APPROVED PLANS. THE CONTRACTOR SHALL ALSO PROCESS THE REVISED PLANS REFLECTING ALL SUBSTITUTIONS THROUGH THE APPROPRIATE OFFICE OF ALL GOVERNING AGENCIES.

WOOD NOTES

1. SAWN WOOD MEMBERS SHALL BE DOUGLAS FIR-LARCH (U.N.O.), CONFORM TO THE "2019 CALIFORNIA BUILDING CODE" (CBC) SEC. 2303, AND SHALL BE GRADE MARKED BY AN ACCREDITATION BODY THAT COMPLIES WITH DOC PS 20 OR EQUIVALENT.
2. WOOD GRADES, U.N.O., SHALL BE AS FOLLOWS:

MEMBERS	GRADE
WALLS 2 X 4 (8'-0")	CONSTRUCTION
WALLS 2 X 4 (8'-1" TO 12'-0")	#2
WALLS 2 X 6 (12'-0" to 16'-0")	#2
STRUCTURAL JOISTS AND PLANKS (2x)	#1
BEAMS AND STRINGERS (4x8 & WIDER)	#1
POSTS AND TIMBERS	#1
TOP PLATE & BOTTOM PLATE	MATCH WALL MEMBERS

3. ALL WOOD THAT REST ON EXTERIOR FOUNDATION WALLS AND ARE LESS THAN 8" FROM EXPOSED EARTH, ALL WOOD ATTACHED DIRECTLY TO INTERIOR OR EXTERIOR MASONRY OR CONCRETE WALLS BELOW GRADE, AND ALL WOOD SLEEPERS AND SILLS ON CONCRETE THAT IS IN DIRECT CONTACT WITH EARTH SHALL BE PRESERVATIVE-TREATED DOUGLAS FIR.
4. ALL SILLS OR PLATES BEARING ON CONCRETE OR MASONRY SHALL HAVE ANCHOR BOLTS:
   A. NOT LESS THAN 1/2" Φ.
   B. EMBEDDED AT LEAST 7" INTO CONCRETE OR MASONRY.
   C. SPACED NOT MORE THAN 6' APART.
   D. PLACED A MIN. OF 5" AND A MAX. OF 12" FROM EACH END.
   E. A MINIMUM OF TWO BOLTS PER PIECE.
   F. SIZE AND SPACED AS SHOWN ON THE DRAWINGS.
5. WOOD STRUCTURAL PANELS SHALL CONFORM TO THE "2019 CALIFORNIA BUILDING CODE" (CBC) SEC. 2303, AND SHALL CONFORM TO THE REQUIREMENTS FOR THEIR TYPE IN DOC PS 1 OR PS2. EACH PANEL SHALL BE IDENTIFIED FOR GRADE AND GLUE TYPE BY THE TRADEMARKS OF AN APPROVED TESTING AND GRADING AGENCY. WOOD STRUCTURAL PANELS THAT ARE PERMANENTLY EXPOSED IN OUTDOOR APPLICATIONS SHALL BE OF EXTERIOR TYPE (U.N.O.).

   ALL WOOD STRUCTURAL PANELS SHALL BE OF THE FOLLOWING GRADES AND PANEL IDENTIFICATION INDEXES (U.N.O. ON DRAWINGS):

USE	GRADE	PANEL IDENTIFICATION INDEX
ROOF SHEATHING	CDX	24/0
FLOOR SHEATHING	APA	48/24
SHEAR PANELS	CDX (U.N.O.)	24/0

6. GLU TIMBERS SHALL BE MANUFACTURED AND IDENTIFIED AS REQUIRED IN AITC A190.1 AND ASTM D 3737, USING DOUGLAS FIR INDUSTRIAL APPEARANCE GRADE WOOD AND EXTERIOR GLUE WITH INTENDED DRY USE CONDITION AND USE SHALL BE AS FOLLOWS:

COMBINATION NO.	USE
24F-V4	SIMPLE SPAN
24F-V8	CANTILEVERS

7. FRAMING ANCHORS, POST CAPS, COLUMN BASES, AND OTHER CONNECTORS SPECIFIED ON DRAWINGS SHALL BE AS MANUFACTURED BY "SIMPSON COMPANY" OR AN ENGINEER-APPROVED EQUAL.
8. BARS, PLATES, UNHEADED BOLTS, WASHERS AND DRIFT BOLTS SHALL CONFORM TO THE REQUIREMENTS OF ASTM A36.
9. BOLTS SHALL CONFORM TO ASTM A307. BOLTS IN PRESSURE TREATED WOOD SHALL BE HOT DIPPED ZINC-COATED GALVANIZED STEEL PER ASTM A 153 OR MECHANICALLY DEPOSITED ZINC COATING WITH WEIGHTS PER ASTM B 695, CLASS 55.
10. NUTS SHALL CONFORM TO THE REQUIREMENTS OF ASTM A563, GRADE A.

WOOD NOTES (cont.)

11. ALL BOLT HEADS, NUTS, AND LAG SCREWS BEARING ON WOOD SHALL HAVE CUT WASHERS UNLESS NOTED.
12. BOLT HOLES SHALL BE DRILLED A MAXIMUM OF 1/16" LARGER THAN THE NOMINAL BOLT DIAMETER. BOLT HOLES SHALL BE ACCURATELY ALIGNED AND NOT FORCIBLY DRIVEN.
13. SPECIAL CONNECTORS FOR CONNECTING WOOD OR GLUED LAMINATED TIMBER SHALL BE FABRICATED FROM STEEL CONFORMING TO ASTM A36. WELDS SHALL CONFORM TO THE REQUIREMENTS OF AWS D1.1-85.
14. DIAPHRAGM NAILING SHALL CONFORM TO CBC TABLE 2306.2.1 AND 2306.2.2, AND TABLE 2306.3.1 AND 2306.3.2 WITH NOMENCLATURE DEFINED AS FOLLOWS:
    BN = NAILING AT DIAPHRAGM BOUNDARIES, CONTINUOUS PANEL EDGES, AND AT EDGES OF OPENING.
    EN = EDGE NAILING
    FN = FIELD NAILING
15. WHERE DIAPHRAGM BLOCKING IS SPECIFIED, USE 2 X 4 FLAT BLOCKING (WITH "Z" CLIPS). (U.N.O.)
16. SIMPLE SPAN WOOD MEMBERS, NOT SHOP CAMBERED, SHALL BE ERECTED WITH THE NATURAL CAMBER UP. FOR CANTILEVERED WOOD MEMBERS, CONSULT WITH ENGINEER.
17. LEAD HOLES FOR LAG SCREWS IN WOOD SHALL BE BORED AS FOLLOWS: FOR SHANK: SAME DIAMETER AND LENGTH AS UNTHREADED SHANK. FOR THREADED PORTION: 60% TO 75% OF SHANK DIAMETER & LENGTH EQUAL TO THE THREADED PORTION.
18. SPECIAL PROVISIONS FOR SHEAR WALLS WITH PLYWOOD ON BOTH SIDES: WHERE SPECIFICALLY INDICATED ON PLANS
    A. SILL PLATE SHALL BE 3x6 P.T. D.F.
    B. ALL STUDS AND BLOCKING AT PANEL EDGES SHALL BE 4x6.
    C. ALL OTHER INTERMEDIATE STUDS SHALL BE 3x6 @ 16"O.C.
    D. END POSTS SHALL BE AS SPECIFIED ON THE DRAWINGS.
    E. BOTH VERTICAL AND HORIZONTAL INTERIOR PANEL JOINTS ON OPPOSITE SIDES OF THE WALL SHALL BE STAGGERED.
    F. THE PLYWOOD ON ONE SIDE MUST BE NAILED BEFORE THE FRAME INSPECTION. THE PLYWOOD ON THE OTHER SIDE MUST BE INSTALLED AND INSPECTED PRIOR TO INSTALLATION OF WALL SURFACE COVERING.
    G. NO PENETRATIONS OR NOTCHES ARE PERMITTED OTHER THAN THOSE SHOWN ON THE STRUCTURAL DRAWINGS.
19. PROVIDE DOUBLE STUD TO SUPPORT ALL BEAMS UNLESS POSTS ARE SPECIFIED.
20. DOUBLE BLOCK UNDER ALL POSTS.
21. DOUBLE JOIST UNDER ALL PARALLEL PARTITIONS UNLESS OTHERWISE SPECIFIED.
22. TOP PLATES OF ALL WOOD STUD WALLS SHALL BE 2-2 X (SAME WIDTH AS STUDS), LAP 48" (MIN.), WITH AT LEAST 12-16d NAILS AT EACH SIDE OF LAP AND NOT MORE THAN 12" BETWEEN.
23. CUTTING, NOTCHING, OR DRILLING OF BEAMS OR JOISTS SHALL BE PERMITTED ONLY AS DETAILED OR APPROVED BY THE ENGINEER.
24. MOISTURE CONTENT OF WOOD AT TIME OF PLACEMENT SHALL NOT EXCEED 19%.
25. PROVIDE ST6224 STRAPS ACROSS ALL DISCONTINUOUS TOP PLATES.
26. THE NUMBER AND SIZE OF FASTENERS CONNECTING WOOD MEMBERS SHALL NOT BE LESS THAN THE FOLLOWING TABLE.

NAILING SCHEDULE (2019 CBC TABLE 2304.10.1)

No.	Connection	Fastening
1.	BLK'G BTWN. CEILING JOISTS, RAFTERS OR TRUSSES TO TOP PLATE OR OTHER FRAMING BELOW, END NAIL/TOENAIL	3-8d
	BLK'G. BTWN. RAFTERS OR TRUSS NOT AT THE WALL TOP PLATE, TO RAFTER OR TRUSS, EACH END-TOENAIL	2-8d
	FLAT BLK'G TO TRUSS AND WEB FILLER, FACE NAIL	16d @ 6" O.C.
2.	CEILING JOISTS TO TOP PLATE, TOENAIL	3-8d
3.	CEILING JOIST NOT ATTACHED TO PARALLEL RAFTER, LAPS OVER PARTITIONS (NO THRUST), FACE NAIL	3-16d
4.	CEILING JOIST ATTACHED TO PARALLEL RAFTER (HEEL JOINT), FACE NAIL	PER TABLE 2308.7.3.1
5.	COLLAR TIE TO RAFTER, FACE NAIL	3-10d
6.	RAFTER OR ROOF TRUSS TO TOP PLATE, TOENAIL	3-10d
7.	ROOF RAFTERS TO RIDGE VALLEY OR HIP RAFTERS OR ROOF RAFTER TO 2-INCH RIDGE BEAM, TOENAIL	3-10d
8.	STUD TO STUD (NOT AT BRACED WALL PANELS), FACE NAIL	16d @ 24"O.C.
9.	STUD TO STUD AND ABUTTING STUDS AT INTERSECTING WALL CORNERS (AT BRACED WALL PANELS), FACE NAIL	16d @ 16" O.C.
10.	BUILT-UP HEADER (2" TO 2" HEADER), FACE NAIL	16d @ 16"O.C.
11.	CONTINUOUS HEADER TO STUD, TOE NAIL	4-8d
12.	TOP PLATE TO TOP PLATE, FACE NAIL	16d @ 16" O.C.
13.	TOP PLATE TO TOP PLATE, AT END JOINTS, EACH SIDE OF END JOINT, FACE NAIL (MINIMUM 24" LAP SPLICE LENGTH EACH SIDE OF END JOINT)	8-16d
14.	BOTTOM PLATE TO JOIST, RIM JOIST, BAND JOIST OR BLOCKING (NOT AT BRACED WALL PANELS), FACE NAIL	16d @ 16" O.C.
15.	BOTTOM PLATE TO JOIST, RIM JOIST, BAND JOIST OR BLOCKING AT BRACED WALL PANELS, FACE NAIL	2-16d @ 16" O.C.
16.	STUD TO TOP OR BOTTOM PLATE, TOENAIL	4-8d
17.	TOP OR BOTTOM PLATE TO STUD, END NAIL	2-16d
18.	TOP PLATES, LAPS AT CORNERS AND INTERSECTIONS, FACE NAIL	2-16d
19.	1" BRACE TO EACH STUD AND PLATE, FACE NAIL	2-8d
20.	1" x 6" SHEATHING TO EACH BEARING, FACE NAIL	2-8d
21.	1" x 8" AND WIDER SHEATHING TO EACH BEARING, FACE NAIL	3-8d
22.	JOIST TO SILL, TOP PLATE, OR GIRDER, TOENAIL	3-8d
23.	RIM JOIST, BAND JOIST, OR BLOCKING TO TOP PLATE, SILL OR OTHER FRAMING BELOW, TOENAIL	8d @ 6" O.C.
24.	1" x 6" SUBFLOOR OR LESS TO EACH JOIST, FACE NAIL	2-8d
25.	2" SUBFLOOR TO JOIST OR GIRDER, FACE NAIL	2-16d
26.	2" PLANKS (PLANK & BEAM - FLOOR & ROOF), EACH BEARING, FACE NAIL	2-16d
27.	BUILT-UP GIRDERS AND BEAMS, 2" LUMBER LAYERS, FACE NAIL AT TOP AND BOTTOM STAGGERED ON OPPOSITE SIDES	20d @ 32" O.C.
28.	LEDGER STRIP SUPPORTING JOISTS OR RAFTERS, FACE NAIL AT EACH JOIST OR RAFTER	3-16d
29.	JOIST TO BAND JOIST OR RIM JOIST, END NAIL	3-16d
30.	BRIDGING OR BLOCKING TO JOIST, RAFTER OR TRUSS, TOENAIL AT EACH END	2-8d
	WOOD STRUCTURAL PANELS, SUBFLOOR, ROOF AND INTERIOR WALL SHEATHING TO FRAMING AND PARTICLEBOARD WALL SHEATHING TO FRAMING	
31.	3/8"-1/2", 6" SPACING AT EDGES, 12" AT INTERMEDIATE SUPPORTS	6d
32.	19/32"-3/4", 6" SPACING AT EDGES, 12" AT INTERMEDIATE SUPPORTS	8d
33.	7/8"-1 1/4", 6" SPACING AT EDGES, 12" AT INTERMEDIATE SUPPORTS	10d
	OTHER EXTERIOR WALL SHEATHING	
34.	1/2" FIBERBOARD SHEATHING, 3" SPACING AT EDGES, 6" SPACING AT INTERMEDIATE SUPPORTS	1 1/2" GALV. RFG. NAIL
35.	25/32" FIBERBOARD SHEATHING, 3" SPACING AT EDGES, 6" SPACING AT INTERMEDIATE SUPPORTS	1 3/4" GALV. RFG. NAIL
	WOOD STRUCTURAL PANELS, COMBINATION SUBFLOOR UNDERLAYMENT TO FRAMING	
36.	3/4" AND LESS, 6" SPACING AT EDGES, 12" SPACING AT INTERMEDIATE SUPPORTS	8d
37.	7/8"-1", 6" SPACING AT EDGES, 12" SPACING AT INTERMEDIATE SUPPORTS	8d
38.	1 1/8"-1 1/4", 6" SPACING AT EDGES, 12" SPACING AT INTERMEDIATE SUPPORTS	10d
	PANEL SIDING TO FRAMING	
39.	1/2" OR LESS, 6" SPACING AT EDGES, 12" SPACING AT INTERMEDIATE SUPPORTS	6d
40.	5/8", 6" SPACING AT EDGES, 12" SPACING AT INTERMEDIATE SUPPORTS	8d
41.	1/4", 6" SPACING AT EDGES, 12" SPACING AT INTERMEDIATE SUPPORTS	4d (FINISH)
42.	3/8", 6" SPACING AT EDGES, 12" SPACING AT INTERMEDIATE SUPPORTS	6d (FINISH)

WOOD NOTES (cont.)

* ALL NAILS TO BE COMMONS (U.N.O.). ALL NAILS IN PRESSURE TREATED WOOD SHALL BE HOT DIPPED ZINC-COATED GALVANIZED STEEL PER ASTM A 153.
* WHENEVER POSSIBLE NAILS DRIVEN PERPENDICULAR TO THE GRAIN SHALL BE USED INSTEAD OF TOENAILS.
* DIAPHRAGM SHEATHING NAILS OR OTHER APPROVED SHEATHING CONNECTORS SHALL BE DRIVEN SO THAT THEIR HEAD OR CROWN IS FLUSH WITH THE SURFACE OF THE SHEATHING.

CONCRETE NOTES

1. CONCRETE SHALL CONFORM TO THE REQUIREMENTS OF ACI 318-14 CHAPTER 19. THE MINIMUM 28-DAY CYLINDER STRENGTH SHALL BE AS FOLLOWS:

FOUNDATIONS:	STRENGTH:
SLAB ON GRADE & RAISED WOOD FLOOR	2500 PSI
CAISSONS / GRADE BEAMS	3000 PSI
ALL OTHER CONC. (U.N.O.)	2500 PSI

2. WHERE CONCRETE STRENGTH IS 3000 PSI OR GREATER, CYLINDER TESTS ARE REQUIRED PER ACI 318-14 5.6.3.3.
3. PORTLAND CEMENT SHALL CONFORM TO THE REQUIREMENTS OF ASTM C150, TYPE II.
4. AGGREGATES SHALL CONFORM TO THE REQUIREMENTS OF ASTM C33 FOR NORMAL WEIGHT CONCRETE AND ASTM C330 FOR LIGHTWEIGHT CONCRETE.
5. ADMIXTURES SHALL BE USED IN ACCORDANCE WITH THE MANUFACTURER'S RECOMMENDATIONS AND APPROVED BY THE ENGINEER OF RECORD.
6. READY-MIX CONCRETE SHALL BE MIXED AND DELIVERED IN ACCORDANCE WITH THE REQUIREMENTS OF "STANDARD SPECIFICATION FOR READY-MIXED CONCRETE" ASTM C94.
7. MINIMUM CONCRETE COVER (IN INCHES) FOR REINFORCING STEEL IN NONPRESTRESSED CAST-IN-PLACE CONCRETE SHALL BE AS FOLLOWS, U.N.O:

LOCATION	MIN. COVER (INCHES)
A. CAST AGAINST AND PERMANENTLY EXPOSED TO EARTH	3"
B. FORMED SURFACES EXPOSED TO EARTH OR WEATHER:	
#6 AND LARGER BAR	2"
#5 BARS, 5/8 INCH WIRE, AND SMALLER	1 1/2"

8. ALL SLEEVES THROUGH BEAMS, GIRDERS AND FOUNDATION WALLS SHALL BE INSTALLED AND SECURED IN POSITION PRIOR TO PLACING CONCRETE. EXCEPT AS SHOWN ON STRUCTURAL DRAWINGS, SLEEVING SHALL NOT BE PERMITTED UNLESS APPROVED BY THE DESIGNER AND STRUCTURAL ENGINEER.
9. SLEEVES, PIPES, OR CONDUITS SHALL NOT BE PLACED THROUGH CONTINUOUS OR SPREAD FOOTINGS, GRADE BEAMS, PILE CAPS, OR TIE BEAMS, UNLESS SPECIFICALLY DETAILED BY THE ENGINEER.
10. CONDUIT SHALL NOT BE PLACED IN ANY CONCRETE SLAB LESS THAN 3-1/2 INCHES THICK. IF CONDUIT IS PLACED IN CONCRETE SLAB, ITS OUTSIDE DIAMETER SHALL NOT BE GREATER THAN 1/3 OF THE SLAB THICKNESS. THE MINIMUM CLEAR DISTANCE BETWEEN CONDUITS SHALL BE 3 INCHES.
11. ALL EXPOSED CORNERS SHALL BE CHAMFERED 3/4 INCH U.N.O.
12. REFER TO ARCHITECTURAL DRAWINGS FOR MOLDS, GROOVES, ORNAMENTS, CLIPS, OR GROUNDS REQUIRED TO BE CAST IN THE CONCRETE AND FOR EXTENT OF DEPRESSIONS, CURBS, AND RAMPS.
13. ALL VERTICAL SURFACES OF CONCRETE ABOVE FINISHED GRADE SHALL BE FORMED.
14. REFERENCE ARCH. DRAWINGS AND SPECIFICATIONS FOR ADDITIONAL REQUIREMENTS DUE TO ARCHITECTURAL C.I.P. CONCRETE.

REINFORCING STEEL NOTES

1. BAR REINFORCEMENT SHALL CONFORM TO THE REQUIREMENTS OF ASTM A615. THE FOLLOWING GRADES SHALL BE USED:
   GRADE 40 - #4 AND SMALLER
   GRADE 60 - #5 AND LARGER
2. DETAILS OF REINFORCEMENT SHALL CONFORM TO THE REQUIREMENTS OF ACI 318-14 CHAPTER 25 AND OTHER SECTIONS ACCORDING TO APPLICATION.
3. LAPS AT BAR SPLICES IN CONCRETE CONSTRUCTION SHALL BE AS FOLLOWS:

BAR SIZE	TOP BARS (CLASS B)		OTHER THAN TOP BARS (CLASS B)	
	f'c = 2500 PSI	f'c = 3000 PSI	f'c = 2500 PSI	f'c = 3000 PSI
#5	30	27	24	21
#6	35	33	28	25
#7	40	38	32	29
#8	45	43	36	33

4. LAPS AT BAR SPLICES IN MASONRY CONSTRUCTION SHALL BE 48 BAR DIAMETERS BUT NOT LESS THAN 2'-0".
5. VERTICAL REINFORCEMENT SHALL BE TIED OR OTHERWISE FIXED IN POSITION AT THE TOP AND BOTTOM AND AT INTERMEDIATE LOCATIONS, SPACED NOT GREATER THAN 192 BAR DIAMETERS.
6. WELDED STEEL WIRE FABRIC REINFORCEMENT SHALL CONFORM TO ASTM A185. LAPS OF WELDED STEEL WIRE FABRIC AT SPLICES SHALL BE NOT LESS THAN 12 INCHES.
7. WALLS, PILASTERS, AND COLUMNS SHALL BE DOWELED TO THE SUPPORTING FOOTINGS WITH REINFORCEMENT OF THE SAME SIZE, GRADE AND AT THE SAME SPACING AS THE VERTICAL REINFORCEMENT IN THE WALLS, PILASTERS, OR COLUMNS (U.N.O).
8. BAR SUPPORTS SHALL BE PROVIDED IN ACCORDANCE WITH THE PROVISIONS OF "BAR SUPPORT SPECIFICATIONS" AS CONTAINED IN THE LATEST EDITION OF THE "MANUAL OF STANDARD PRACTICE" BY THE CONCRETE REINFORCING STEEL INSTITUTE (CRSI).
9. REINFORCING STEEL DETAILING, BENDING AND PLACING SHALL BE IN ACCORDANCE WITH THE CONCRETE REINFORCING STEEL INSTITUTE "MANUAL OF STANDARD PRACTICE", LATEST EDITION.
10. ALL REINFORCEMENT SHALL BE SECURELY TIED IN PLACE BEFORE PLACING CONCRETE OR GROUT.
11. WELDING OF REINFORCING BARS SHALL CONFORM TO "STRUCTURAL WELDING CODE-REINFORCING STEEL," ANSI/AWS D1.4 OF THE AMERICAN WELDING SOCIETY.
12. WELDING OF ALL REINFORCING STEEL TO STRUCTURAL STEEL SHALL BE LIMITED TO THOSE AREAS SPECIFICALLY SHOWN ON THE PLANS. ANY OTHER WELDING SHALL REQUIRE THE APPROVAL OF THE GOVERNING AGENCY, FIELD INSPECTOR, AND STRUCTURAL ENGINEER.
13. WELDING OF CROSSING BARS AND TACK WELDING OF REINFORCEMENT SHALL NOT BE PERMITTED.
14. ALL WELDS SHALL, IN ADDITION, TO ALL THE SPECIFICATIONS LISTED ABOVE, COMPLY WITH THE REQUIREMENTS OF THE 15TH EDITION OF THE "MANUAL OF STEEL CONSTRUCTION - ALLOWABLE STRESS DESIGN" AS PUBLISHED BY THE AMERICAN INSTITUTE OF STEEL CONSTRUCTION.

SHEARWALL SCHEDULE - 2019 CBC (SEE NOTES 1-13)

SYMBOL	SHEAR (PLF)	MATERIAL AND NAILING DESCRIPTION	ANCHOR BOLT SCHED. & SILL PLATE SIZE (SEE NOTES 9-12)	BOTTOM PLATE SIZE & NAILING	SHEAR TRANSFER @ RIM JOIST/BLK'G (SEE NOTE 15)
1	260	3/8" CDX PLYWOOD W/ 8d @ 6"o.c. E.N. / 12"o.c. F.N.	2x P.T. SILL PL. W/ 1/2"Φ A.B. @ 36"o.c. OR 5/8"Φ A.B. @ 48"o.c.	2x PLATE W/ 16d @ 6"o.c. **(SEE NOTE 16)**	A35 OR LTP4 @ 24"o.c.
2	350	3/8" CDX PLYWOOD W/ 8d @ 4"o.c. E.N. / 12"o.c. F.N.	2x P.T. SILL PL. W/ 1/2"Φ A.B. @ 24"o.c. OR 5/8"Φ A.B. @ 32"o.c.	2x PLATE W/ 16d @ 4"o.c. **(SEE NOTE 16)**	A35 OR LTP4 @ 16"o.c.
3	490	3/8" CDX PLYWOOD W/ 8d @ 3"o.c. E.N. / 12"o.c. F.N. **(SEE NOTE 14)**	2x P.T. SILL PL. W/ 1/2"Φ A.B. @ 16"o.c. OR 5/8"Φ A.B. @ 24"o.c.	2x PLATE W/ 16d @ 3"o.c. **(SEE NOTE 16)**	A35 OR LTP4 @ 12"o.c.
4	640	3/8" CDX PLYWOOD W/ 8d @ 2"o.c. E.N. / 12"o.c. F.N. **(SEE NOTE 14)**	2x P.T. SILL PL. W/ 1/2"Φ A.B. @ 12"o.c. OR 5/8"Φ A.B. @ 20"o.c.	2x PL. W/ 1/2"Φ x 8" LONG LAG SCREWS @ 10"o.c. INTO 4x RIM JOIST/BLK.'G	A35 OR LTP4 @ 10"o.c.
5	730	3/8" STRUCT I PLYWOOD W/ 8d @ 2"o.c. E.N. / 12"o.c. F.N. **(SEE NOTE 14)**	2x P.T. SILL PL. W/ 1/2"Φ A.B. @ 8"o.c. OR 5/8"Φ A.B. @ 16"o.c.	2x PL. W/ 1/2"Φ x 8" LONG LAG SCREWS @ 8"o.c. INTO 4x RIM JOIST/BLK.'G	A35 OR LTP4 @ 9"o.c.
6	860	15/32" STRUCT I PLYWOOD W/ 10d @ 2"o.c. E.N. / 12"o.c. F.N. **(SEE NOTE 14)**	**3x P.T. SILL PL.** W/ 1/2"Φ A.B. @ 12"o.c. OR 5/8"Φ A.B. @ 20"o.c.	**3x PL.** W/ 1/2"Φ x 8" LONG LAG SCREWS @ 6"o.c. INTO 4x RIM JOIST/BLK.'G	A35 OR LTP4 @ 8"o.c.
7	1100	3/8" STRUCT I PLYWOOD **(BOTH SIDES)** W/ 10d @ 3"o.c. E.N. / 12"o.c. F.N. **(SEE NOTE 17 AND DETAIL 9/SD1)**	**3x P.T. SILL PL.** W/ 1/2"Φ A.B. @ 8"o.c. OR 5/8"Φ A.B. @ 12"o.c.	**3x PL.** W/ 1/2"Φ x 8" LONG LAG SCREWS @ 5"o.c. INTO 4x RIM JOIST/BLK.'G	A35 OR LTP4 @ 6"o.c.
8	1460	3/8" STRUCT I PLYWOOD **(BOTH SIDES)** W/ 10d @ 2"o.c. E.N. / 12"o.c. F.N. **(SEE NOTE 17 AND DETAIL 9/SD1)**	**3x P.T. SILL PL.** W/ 1/2"Φ A.B. @ 6"o.c. OR 5/8"Φ A.B. @ 9"o.c.	**3x PL.** W/ 1/2"Φ x 8" LONG LAG SCREWS @ 4"o.c. INTO 4x RIM JOIST/BLK.'G	A35 OR LTP4 @ 5"o.c.
9	1740	1/2" STRUCT I PLYWOOD **(BOTH SIDES)** W/ 10d @ 2"o.c. E.N. / 12"o.c. F.N. **(SEE NOTE 17 AND DETAIL 9/SD1)**	**3x P.T. SILL PL.** W/ 5/8"Φ A.B. @ 6"o.c. OR 3/4"Φ A.B. @ 10"o.c.	**3x PL.** W/ 5/8"Φ x 8" LONG LAG SCREWS @ 4"o.c. INTO 4x RIM JOIST/BLK.'G	**HGA10KY** @ 8" o.c. OR LTP4 @ 4"o.c.

* WHEN AN ASTERISK * ACCOMPANIES THE SHEARWALL SYMBOL, SHEATHING IS TO BE CONTINUOUS THROUGH ADJACENT WALL FRAMING.

SHEARWALL SCHEDULE NOTES:

1. SHEAR PANELS SHALL BE APPLIED DIRECTLY TO STUD FRAMING.
2. PLYWOOD MAY BE INSTALLED EITHER HORIZONTALLY OR VERTICALLY.
3. ALL PLYWOOD PANEL EDGES SHALL BE BLOCKED W/ 2x BLOCKING MIN.
4. SHEARWALLS MORE THAN ONE VERTICAL PANEL IN HEIGHT SHALL HAVE EITHER VERTICAL OR HORIZONTAL STAGGERED SPLICED JOINTS.
5. PROVIDE 1/2" MIN. EDGE DISTANCE FOR ALL PLYWOOD EDGE NAILING.
6. ONLY COMMON NAILS ARE TO BE USED FOR ALL PLYWOOD SHEATHING ATTACHMENT.
7. NAIL GUNS USING "CLIPPED HEAD" OR "SINKER" NAILS ARE NOT ACCEPTABLE.
8. ALL BOLT HOLES TO BE DRILLED 1/32" MIN. TO 1/16" MAX. OVERSIZED.
9. USE DOUGLAS FIR #2 PRESSURE TREATED SILL PLATES. ALL FASTENERS AND CONNECTORS IN PRESSURE TREATED SILL PLATES SHALL BE HOT DIPPED ZINC-COATED GALVANIZED STEEL PER ASTM A 153. ANCHOR BOLTS MAY HAVE A MECHANICALLY DEPOSITED ZINC COATING WITH WEIGHTS PER ASTM B 695, CLASS 55.
10. NORMAL UNPROTECTED CARBON STEEL FASTENERS ARE **ONLY ACCEPTABLE** WHEN INSTALLED IN WOOD PRESERVED WITH BORATE BASED PRESERVATIVE AND WHEN THE TREATED WOOD IS LOCATED IN A DRY AND ENCLOSED ENVIRONMENT SUCH AS IN A WALL CAVITY.
11. ANCHOR BOLTS MUST BE EMBEDDED 7" MIN. INTO NEW CONCRETE. WHERE SHEARWALLS ARE TO BE ATTACHED TO EXISTING FOOTINGS, EPOXY 5/8"Φ THREADED ROD ANCHORS WITH 5" MIN. EMBEDMENT USING SIMPSON 'SET-XP' HIGH STRENGTH ADHESIVE (ESR-2508) WITH SPECIAL INSPECTION **(OR)** 5/8"Φx6" LONG SIMPSON 'TITEN HD' ANCHORS (ESR-2713) WITH SPECIAL INSPECTION INSTALLED AT THE SPACING INDICATED IN THE SHEARWALL SCHEDULE ABOVE.
12. FOUNDATION ANCHOR BOLTS IN ALL SHEAR WALLS SHALL HAVE A MINIMUM 3" x 3" x 1/4" THICK PLATE WASHERS BETWEEN THE SILL PLATE AND NUT, LOCATED NO MORE THAN 1/2" FROM EDGE OF BOT. PL. ON THE SIDE(S) WITH SHEATHING. THE NUTS SHALL BE TIGHTENED JUST PRIOR TO COVERING THE WALL FRAMING.
13. STUCCO AND/OR EXTERIOR VENEER OVER A PLYWOOD SHEARWALL SHALL BE WATERPROOFED W/ A MIN. OF (2) LAYERS OF #15LB. FELT PAPER.
14. ALL FRAMING MEMBERS RECEIVING EDGE NAILING FROM ABUTTING PANELS SHALL BE **3-INCH NOMINAL** OR THICKER. ALL EDGE NAILING SHALL BE STAGGERED.
15. WHEN 'LTP4' IS INSTALLED OVER PLYWOOD, USE USE 8d COMMON NAILS.
16. WHERE BOTTOM PLATE NAILING GOES THROUGH FLOOR SHEATHING THICKER THAN 3/4", USE **20d NAILS** AT SAME SPACING AS INDICATED OR SIMPSON **SDS25412** SCREWS AT TWICE THE SPACING AS INDICATED.
17. WHERE PLYWOOD PANELS ARE APPLIED ON BOTH FACES OF A WALL, USE A **3x6** BOT./SILL PLATE, **3x6 STUDS** @ 16"o.c., AND **3x6 df. #2** DOUBLE TOP PLATES. ALL FRAMING MEMBERS RECEIVING EDGE NAILING FROM ABUTTING PANELS SHALL BE **4-INCH NOMINAL** OR THICKER. ALL EDGE NAILING SHALL BE STAGGERED AND BOTH VERTICAL AND HORIZONTAL INTERIOR PANEL JOINTS ON OPPOSITE SIDES OF THE WALL SHALL BE STAGGERED. SEE WOOD NOTES # 18 FOR ADDITIONAL REQUIREMENTS.

MASONRY NOTES

1. MASONRY UNITS SHALL CONFORM TO ASTM C90 HOLLOW CORE, NORMAL WEIGHT, f'm= 1500 psi (U.N.O.). ALL UNITS SHALL BE SAMPLED AND TESTED IN ACCORDANCE WITH ASTM C140.
2. MORTAR SHALL BE TYPE S AND SHALL CONFORM TO ASTM C270 AND ARTICLES 2.1 & 2.6A OF TMS 602 / ACI 530.1. THE THICKNESS OF THE BED JOINTS SHALL NOT EXCEED 5/8".
3. GROUT SHALL CONFORM TO ASTM C476, OR CONFORM TO THE REQUIREMENTS OF ARTICLE 2.2 OF TMS 602 / ACI 530.1 AND THE COMPRESSIVE STRENGTH OF GROUT SHALL BE DETERMINED IN ACCORDANCE WITH ASTM C1019. WHEN GROUT CONFORMS TO ASTM C476, THE GROUT SHALL BE SPECIFIED BY PROPORTION REQUIREMENTS OR PROPERTY REQUIREMENTS. THE MINIMUM COMPRESSIVE STRENGTH OF GROUT SHALL BE 2,000 psi.
4. PORTLAND CEMENT SHALL CONFORM TO THE REQUIREMENTS OF ASTM C150. BLENDED CEMENT SHALL CONFORM TO THE REQUIREMENTS OF ASTM C595. MASONRY CEMENT SHALL CONFORM TO THE REQUIREMENTS OF ASTM C91. MORTAR CEMENT SHALL CONFORM TO THE REQUIREMENTS OF ASTM C1329.
5. COARSE AGGREGATE SHALL CONFORM TO ASTM C404. COARSE AGGREGATE SHALL BE PEA GRAVEL.
6. FINE AGGREGATE SHALL CONFORM TO ASTM C144.
7. LIME SHALL BE HYDRATED LIME AND CONFORM TO ASTM C207, TYPE S.
8. ADMIXTURES SHALL BE USED IN ACCORDANCES WITH THE MANUFACTURER'S RECOMMENDATIONS AND APPROVED BY THE ENGINEER OF RECORD.

STRUCTURAL STEEL NOTES

1. THE DESIGN, FABRICATION AND ERECTION OF STRUCTURAL STEEL SHALL BE IN ACCORDANCE WITH AISC 360-16 (15TH EDITION).
2. ALL STRUCTURAL STEEL TO BE THE FOLLOWING (U.N.O.):
   W SHAPES: ASTM A992, Fy= 50ksi
   HSS SHAPES (RECTANGULAR): ASTM A500, GRADE B, Fy= 46ksi
   HSS SHAPES (ROUND): ASTM A500, GRADE B, Fy= 42ksi
   PIPE SHAPES: ASTM A53, GRADE B, Fy= 35ksi
   ALL OTHER STEEL: ASTM A36, Fy= 36ksi
3. ALL STRUCTURAL WELDS TO BE THE FOLLOWING:
   E70 SERIES-TYP.
   E90 SERIES FOR A615 GRADE 60 REINFORCING BARS

   SHOP WELDING TO BE DONE IN AN APPROVED FABRICATOR'S SHOP. FIELD WELDING TO HAVE CONTINUOUS SPECIAL INSPECTION.

DESIGN CRITERIA

DESIGN LOADS

ROOF		FLOOR	
COMP, 4 psf MAX.		CARPET, 4 psf MAX.	
TOTAL DEAD LOAD:	14.0 psf	TOTAL DEAD LOAD:	14.0 psf
LIVE LOAD:	20.0 psf	LIVE LOAD:	40.0 psf
TOTAL LOAD:	**34.0 psf**	**TOTAL LOAD:**	**54.0 psf**
		EXTERIOR WALL (**STUCCO**)	**16.0 psf**
		INTERIOR WALL	**7.0 psf**

LATERAL DESIGN COEFFICIENTS

SEISMIC LOAD: CHAPTER 12.8 OF ASCE 7-16
EQUIVALENT LATERAL FORCE PROCEDURE

RISK CATEGORY: II
I_e = 1.0 SEISMIC IMPORTANCE FACTOR
SEISMIC DESIGN CATEGORY: D
SITE CLASS: D
S_S = 1.283 S_1 = 0.438
S_{DS} = 1.026 S_{D1} = 0.544
R= 6.5 - WOOD SHEARWALLS
SEISMIC BASE SHEAR $V = \frac{S_{DS} * I}{R} W$

SOIL DESIGN PROPERTIES

ALLOWABLE BEARING PRESSURE, q= 1500 psf
EXISTING NATURAL SOIL PER 2019 CBC TABLE 1806.2

STATEMENT OF SPECIAL INSPECTION

DESCRIPTION OF TYPE OF INSP. REQ'D., LOCATION, REMARKS, ETC.	DESIGN STRENGTH
CONCRETE @ RETAINING WALLS PER PLAN PER CBC TABLE 1705.3, ITEM #5 DURING TAKING OF TEST SPECIMENS AND PLACEMENT OF CONCRETE	f'c = 3000 psi
SHOP WELDING NOTE: SEE BUILDING NEWSLETTER FOR OFF-SITE FABRICATION. ALL SHOPS MUST BE APPROVED BY THE CITY FIELD INSPECTION SERVICES PRIOR TO COMMENCING ANY FABRICATION.	E-70XX
ALL STRUCTURAL FIELD WELDING PER CBC 1705.2 & 1705.12.1 CONTINUOUS SPECIAL INSPECTION	E70XX

NOTES:

A. THE SPECIAL INSPECTIONS IDENTIFIED ARE IN ADDITION TO THOSE REQUIRED BY THE BUILDING CODE, AS AMENDED. SPECIAL INSPECTION IS NOT A SUBSTITUTE FOR INSPECTION BY A CITY INSPECTOR.
B. CONTINUOUS INSPECTIONS IS ALWAYS REQUIRED DURING THE PERFORMANCE OF THE WORK UNLESS OTHERWISE SPECIFIED. WHEN WORK IN MORE THAN ONE CATEGORY OF WORK REQUIRING SPECIAL INSPECTION IS TO BE PERFORMED SIMULTANEOUSLY, OR THE GEOGRAPHIC LOCATION OF THE WORK IS SUCH THAT IT CANNOT BE CONTINUOUSLY OBSERVED IN ACCORDANCE WITH THE PROVISIONS OF IBC SECTION 1704, IT IS THE AGENT'S RESPONSIBILITY TO EMPLOY A SUFFICIENT NUMBER OF INSPECTORS TO ASSURE THAT ALL THE WORK IS INSPECTED IN ACCORDANCE WITH THOSE PROVISIONS.
C. THE SPECIAL INSPECTORS MUST BE CERTIFIED BY THE GOVERNING JURISDICTION TO PERFORM THE TYPE OF INSPECTION SPECIFIED.
   EXCEPTIONS :
   1 SOILS INSPECTIONS BY THE SOILS E.O.R.
   2 SMOKE CONTROL SYSTEM, BY THE MECHANICAL E.O.R.
   3 WHEN WAIVED BY THE BUILDING OFFICIAL.
D. IT IS THE RESPONSIBILITY OF THE CONTRACTOR TO NOTIFY THE SPECIAL INSPECTOR OR INSPECTION AGENCY AT LEAST ONE WORKING DAY PRIOR TO PERFORMING ANY WORK THAT REQUIRES SPECIAL INSPECTION.
E. SPECIALLY INSPECTED WORK THAT IS INSTALLED OR COVERED WITHOUT THE APPROVAL OF THE CITY INSPECTOR IS SUBJECT TO REMOVAL OR EXPOSURE.
F. **NOTICE TO THE APPLICANT/OWNER/OWNER'S AGENT/ARCHITECT OR ENGINEER OF RECORD:** BY USING THIS PERMITTED CONSTRUCTION DRAWINGS FOR CONSTRUCTION/INSTALLATION OF THE WORK SPECIFIED HEREIN, YOU AGREE TO COMPLY WITH THE REQUIREMENTS OF CITY OF SAN DIEGO FOR SPECIAL INSPECTIONS, STRUCTURAL OBSERVATIONS, CONSTRUCTION MATERIAL TESTING AND OFF-SITE FABRICATION OF BUILDING COMPONENTS, CONTAINED IN THE STATEMENT OF SPECIAL INSPECTIONS AND, AS REQUIRED BY THE CALIFORNIA CONSTRUCTION CODES.
G. **NOTICE TO THE CONTRACTOR/BUILDER/INSTALLER/SUB-CONTRACTOR/OWNER-BUILDER:** BY USING THIS PERMITTED CONSTRUCTION DRAWINGS FOR CONSTRUCTION/INSTALLATION OF THE WORK SPECIFIED HEREIN, YOU ACKNOWLEDGE AND ARE AWARE OF, THE REQUIREMENTS OF CITY OF SAN DIEGO FOR SPECIAL INSPECTIONS, STRUCTURAL OBSERVATIONS, CONSTRUCTION MATERIAL TESTING AND OFF-SITE FABRICATION OF BUILDING COMPONENTS, CONTAINED IN THE STATEMENT OF SPECIAL INSPECTIONS AND, AS REQUIRED BY THE CALIFORNIA CONSTRUCTION CODES.
H. THE CONSTRUCTION MATERIALS TESTING LABORATORY MUST BE APPROVED BY THE CITY OF SAN DIEGO, DEVELOPMENT SERVICES, FOR TESTING OF MATERIALS, SYSTEMS, COMPONENTS, AND EQUIPMENTS.
I. FABRICATOR MUST BE REGISTERED AND APPROVED BY THE CITY OF SAN DIEGO, DEVELOPMENT SERVICES FOR THE FABRICATION OF MEMBERS AND ASSEMBLIES ON THE PREMISES OF THE FABRICATOR'S SHOP.
J. FABRICATION OF MEMBERS AND ASSEMBLIES DONE IN A FABRICATOR'S SHOP APPROVED BY INSPECTION SERVICES NEED NOT HAVE CONTINUOUS OR PERIODIC SPECIAL INSPECTION. AT COMPLETION OF FABRICATION, THE APPROVED FABRICATOR SHALL SUBMIT THE 'CERTIFICATE OF COMPLIANCE' FORM TO INSPECTION SERVICES.

A CERTIFICATE OF SATISFACTORY COMPLETION OF WORK REQUIRING SPECIAL INSPECTION MUST BE COMPLETED AND SUBMITTED TO THE INSPECTION SERVICE DEPARTMENT.

Revisions:

△	
△	
△	
△	
△	
△	

REGISTERED PROFESSIONAL ENGINEER
MILES T. LOVELACE
No. C 39734
Exp. 12/31/21
STATE OF CALIFORNIA

Digitally signed by Miles Lovelace
on June 30, 2020

LOVELACE ENGINEERING
Structural Engineering Services
5930 Cornerstone Ct., Ste. 100
San Diego, CA 92121
Ph. (858) 535-9111
Fax (858) 535-1989

Project Name:
NEAGLEY DEN ADDITION
2747 DALE STREET
SAN DIEGO CA, 92104

Designer:
ECO MINDED SOLUTIONS, INC.
9530 PADGETT ST. #109
SAN DIEGO CA, 92126

Job No.	J20243
Cad Ref. No:	-
Date Drawn:	06-09-2020
Date Issued:	-
Proj. Engineer:	A.M.
Drawn By:	-
Checked By:	M.T.L.
Scale:	

Drawing Status:
- ☐ INFORMATION DWGS. (NOT FOR CONSTRUCTION)
- ☐ PRELIMINARY DWGS. (NOT FOR CONSTRUCTION)
- ☐ DESIGN DEVELOPMENT DWGS. (NOT FOR CONSTRUCTION)
- ☐ CHECK SET (NOT FOR CONSTRUCTION)
- ☐ PROGRESS DRAWINGS (NOT FOR CONSTRUCTION)
- ☐ PLAN CHECK DRAWINGS
- ☐ BID SET DRAWINGS
- ☐ CONSTRUCTION DOCUMENTS
- ☐ OTHER ____________

LOVELACE ENGINEERING INC. EXPRESSLY RESERVES ITS COMMON LAW COPYRIGHT AND OTHER PROPERTY RIGHTS IN THIS DOCUMENT. THIS DOCUMENT SHALL NOT BE REPRODUCED, COPIED, CHANGED OR DISCLOSED IN ANY FORM OR MANNER WHATSOEVER WITHOUT FIRST OBTAINING THE EXPRESS WRITTEN CONSENT OF LOVELACE ENGINEERING INC.
© 1994

Sheet Title:
STRUCTURAL GENERAL NOTES

Sheet Number:
S1

HOLD-DOWN SCHEDULE

		MIN. POST SIZE		HOLDOWN	HOLDOWN ANCHOR BOLT	
		2x4 STUD WALL	2x6 STUD WALL		NEW FOUNDATION	EXISTING FOUNDATION (SEE NOTE J)
POST TO FOUNDATION	1	DBL. STUDS	DBL. STUDS	HDU2	SSTB20 (16⅝" MIN. EMB.)	⅝"Φ THRD. ROD W/ 10" EMBED.
	2	DBL. STUDS	DBL. STUDS	HDU4	SB⅝x24 (18" MIN. EMB.)	⅝"Φ THRD. ROD W/ 10" EMBED.
	3	4x4	4x6	HDU5	SB⅝x24 (18" MIN. EMB.)	⅝"Φ THRD. ROD W/ 12" EMBED.
	4	4x6	4x6	HDU8	SB⅞x24 (18" MIN. EMB.)	N/A
	5	4x6 (MAX. 10' HT.) 4x8 (GREATER THAN 10' HT.)	6x6	HDQ8	SB⅞x24 (18" MIN. EMB.)	N/A
	6	4x8 (MAX. 8' HT.) 6x6 (GREATER THAN 8' HT.)	6x6	HDU14	SB1x30 (24" MIN. EMB.)	N/A
	7	PREFABRICATED SHEARWALL HOLDOWN PER DETAILS				
POST TO POST / BEAM	8	DBL. 2x STUDS W/ MSTC40 (V) TO DBL. STUDS/ DROPPED BEAM / HEADER BELOW (14-16d SINKER NAILS INTO STUDS)				
	9	DBL. 2x STUDS W/ MSTC52 (V) TO DBL. STUDS BELOW (22-16d SINKER NAILS INTO STUDS)				
	10	4x POST W/ MSTC66 (V) TO 4x POST BELOW (32-16d SINKER NAILS INTO POST)				
	11	DBL. 2x STUDS W/ MSTC28 (V) TO BEAM BELOW (16-16d SINKER NAILS MIN. INTO STUDS)				
	12	4x POST W/ MSTC48B3 (V) TO BEAM BELOW (38-10d NAILS MIN. INTO POST)				
	13	4x6 POST (2x4 WALL) OR 6x6 POST (2x6 WALL) W/ (2) ST6236 (V) TO BEAM BELOW (14-16d NAILS MIN. INTO POST) (EACH STRAP)				
	14	DBL. 2x STUDS W/ MSTC66B3 (V) TO DROPPED BEAM / HEADER BELOW (38-10d NAILS MIN. INTO STUDS)				

NOTES:

A. REFER TO SIMPSON CATALOG FOR PROPER INSTALLATION PROCEDURES.

B. HOLDOWN CONNECTORS INTO WOOD FRAMING REQUIRE APPROVED PLATE WASHER, AND HOLDOWNS SHALL BE TIGHTENED JUST PRIOR TO COVERING THE WALL FRAMING.

C. HOLDOWN HARDWARE MUST BE SECURED IN PLACE PRIOR TO FOUNDATION INSPECTION.

D. USE APPROPRIATE SIMPSON 'CNW' COUPLER & THREADED ROD AS REQUIRED FOR RAISED WOOD FLOOR FOUNDATION.

E. INCREASE FOUNDATION DEPTH FOR ENTIRE SHEARWALL LENGTH & EXTEND 12" BEYOND HOLDOWN ANCHOR BOLT AS NECESSARY TO ACCOMMODATE THE REQUIRED CONCRETE EMBEDMENT PLUS 3" (MIN.) COVER.

F. REINFORCEMENT SHALL HAVE 3" COVER FROM SOIL

G. USE 10d NAILS @ 8"o.c. STAGGERED ALONG ENTIRE LENGTH OF DBL. STUDS (U.N.O.)

H. WHERE SPECIFIED, USE POST SIZE CALLED OUT ON PLANS.

I. INSTALL SHEARWALLS PRIOR TO INSTALLING POP-OUTS.

J. RETROFIT ANCHOR BOLTS SHALL USE SIMPSON 'SET-XP' EPOXY (ESR-2508) SPECIAL INSPECTION IS REQUIRED

FOUNDATION NOTES

ALL CONCRETE SHALL HAVE A MINIMUM COMPRESSIVE STRENGTH OF 2500 PSI (U.N.O.).

CONTINUOUS EXTERIOR PERIMETER AND CONTINUOUS INTERIOR BEARING WALL FOOTINGS SHALL BE AS FOLLOWS (U.N.O.):

12" WIDE x 12" DEEP INTO NATIVE SOIL OR 90% COMPACTED FILL W/ (2) #4 REINFORCING BAR 3" FROM THE TOP & BOT. OF FOOTING

BOTTOM OF ALL FOOTINGS SHALL MAINTAIN 7'-0" MIN. TO DAYLIGHT WHERE SLOPES OCCUR. HORIZONTAL DISTANCE SHALL BE MEASURED FROM THE BOTTOM LEADING EDGE OF FOOTING TO DAYLIGHT.

CONCRETE SLABS SHALL BE A MINIMUM OF 4" THICK WITH #3 REBAR @ 18" O.C. EACH WAY IN THE CENTER. UNDERLAY WITH 2" CLEAN SAND OVERLYING 10 MIL. VISQUEEN MOISTURE BARRIER OVERLAYING ADDITIONAL 2" CLEAN SAND.

THE VISQUEEN MOISTURE BARRIER SHOULD BE PROPERLY LAPPED AND SEALED AT JOINTS AND AROUND ANY BREAKS SUCH AS OPENINGS FOR UTILITY CONDUITS.

ANCHOR BOLTS SHALL BE ⅝"Φ WITH 7" MIN. EMBEDMENT @ 72" O.C. MAX. REFER TO SHEARWALL SCHEDULE FOR ANCHOR BOLT SIZE AND SPACING.

THERE SHALL BE A MINIMUM OF TWO ANCHOR BOLTS PER SILL PLATE PIECE WITH ONE BOLT LOCATED NOT MORE THAN 12" OR LESS THAN 5" FROM EACH END OF THE SILL PLATE PIECE.

ALL ANCHOR BOLTS SHALL HAVE A MINIMUM OF 3" x 3" x 3 GUAGE (¼" THICK) PLATE WASHER.

ALL ANCHOR BOLTS & NAILS IN PRESSURE TREATED SILL PLATES SHALL BE HOT DIPPED ZINC-COATED GALVANIZED STEEL PER ASTM A 153. ANCHOR BOLTS MAY HAVE A MECHANICALLY DEPOSITED ZINC COATING WITH WEIGHTS PER ASTM B 695, CLASS 55.

ALL ANCHOR BOLTS, HOLDOWN ANCHORS & DOWELS MUST BE TIED IN PLACE **PRIOR** TO CALLING FOR FOUNDATION INSPECTION.

SILL PLATES SHALL BE DOUGLAS FIR #2 PRESSURE TREATED.

ALL NON-BEARING WALLS SHALL USE 2x P.T. SILL W/ "HILTI" SHOTPIN FASTENERS @ 32" O.C., 6" FROM ENDS (ESR-1663). PROVIDE A SHOVEL FTG. FOR RAMSET EMBEDMENT.

ALL DIMENSIONS SHALL BE VERIFIED WITH THE ARCHITECTURAL DRAWINGS. ANY DISCREPANCIES SHALL BE RESOLVED WITH THE ARCHITECT/DESIGNER.

PAD FOOTING SCHEDULE

A	24" SQR. x 12" DEEP W/ (3) # 4 EA. WAY
B	27" SQR. x 12" DEEP W/ (3) # 4 EA. WAY
C	30" SQR. x 12" DEEP W/ (4) # 4 EA. WAY
D	33" SQR. x 12" DEEP W/ (4) # 4 EA. WAY
E	36" SQR. x 12" DEEP W/ (5) # 4 EA. WAY
F	39" SQR. x 12" DEEP W/ (5) # 4 EA. WAY
G	42" SQR. x 12" DEEP W/ (5) # 4 EA. WAY
H	45" SQR. x 12" DEEP W/ (6) # 4 EA. WAY
J	48" SQR. x 12" DEEP W/ (6) # 4 EA. WAY

NOTES:

A. REINFORCEMENT SHALL BE 3" CLEAR FROM SOIL.

B. WHERE SPECIFIED, USE DEPTH OF FOOTING CALLED OUT ON PLANS.

FRAMING NOTES

1. ROOF SHEATHING SHALL BE:
   15/32" PERFORMANCE CATEGORY APA RATED PLYWOOD 32/16 EXPOSURE 1.
   8d COMMON NAILS @ 6" o.c. B.N. & E.N.
   8d COMMON NAILS @ 12" o.c. F.N.
   B.N. APPLIES TO ALL SUPPORTED PLYWOOD EDGES AT:
   DIAPHRAGM EDGES, PERIMETER WALLS, & SHEARWALLS
2. FLOOR SHEATHING SHALL BE:
   23/32" PERFORMANCE CATEGORY APA RATED STURD-I-FLOOR 24" O.C. EXPOSURE 1 T&G.
   10d COMMON NAILS @ 6" o.c. B.N. & E.N.
   10d COMMON NAILS @ 12" o.c. F.N.
   B.N. APPLIES TO ALL SUPPORTED PLYWOOD EDGES AT:
   DIAPHRAGM EDGES, PERIMETER WALLS, & SHEARWALLS
3. ALL FASTENERS IN PRESSURE TREATED WOOD SHALL BE HOT DIPPED ZINC-COATED GALVANIZED STEEL PER ASTM A 153.
4. ALL RAFTERS, JOISTS & HEADERS SHALL BE DOUGLAS FIR LARCH #2 GRADE.
5. ALL BEAMS SHALL BE DOUGLAS FIR LARCH #1 GRADE (U.N.O.).
6. ALL POSTS SHALL BE DOUGLAS FIR LARCH #1 (U.N.O.).
7. ALL ROOF HEADERS SHALL BE 4x4 (U.N.O.).
8. PROVIDE DOUBLE JOISTS @ SIDES & ENDS OF ALL OPENINGS (U.N.O.). SISTER TOGETHER WITH 16d @ 12"O.C. STAGGERED TYPICAL.
9. ALL POSTS TO TOP PLATE & SILL PLATE CONNECTIONS SHALL HAVE SIMPSON 'A34' EACH SIDE (U.N.O.).
10. ALL BEAM TO TOP PLATE CONNECTIONS SHALL HAVE SIMPSON 'A34' EACH SIDE (U.N.O.).
11. USE 2x4 D.F. # 2 STUDS @ 16"O.C. FOR ALL BEARING WALLS 10'-0" OR LESS IN HEIGHT. (14'-0" MAX. FOR NON-BEARING). FOR BEARING STUD WALL HEIGHTS IN EXCESS OF 10'-0", USE 2x6 D.F. # 2 STUDS @ 16"O.C. (16'-0" MAX. HEIGHT) (20'-0" MAX. FOR NON-BEARING). ALL BEARING SLOPING RAKE WALLS SHALL BE CONTINUOUS BETWEEN FLOOR / FOUNDATION AND ROOF FRAMING.
12. TJI JOISTS, MICROLLAMS (LVL), TIMBERSTRANDS (LSL), AND PARALLAMS (PSL) MANUFACTURER SHALL BE WEYERHAEUSER' (ESR-1153, -1387), OR EQUIVALENT. EQUIVALENT BEAMS INCLUDE ANY MANUFACTURER WITH A CURRENT (IBC 2015) APPROVED ICC-ES EVALUATION REPORT WITH THE FOLLOWING PROPERTIES:
    PSL: Fb = 2900 PSI (MIN.), Fv = 285 (MIN.), E = 2.0 x 10^6 PSI (MIN.)
    LVL: Fb = 2600 PSI (MIN.), Fv = 285 (MIN.), E = 1.9 x 10^6 PSI (MIN.)
    LSL: Fb = 2325 PSI (MIN.), Fv = 310 (MIN.), E = 1.55 x 10^6 PSI (MIN.)
13. A CERTIFICATE OF CONFORMANCE IS REQUIRED PRIOR TO FRAMING INSPECTION FOR ALL PARALLEL STRANDED LUMBER.
14. PROVIDE MSTC28 STRAP ACROSS ALL DISCONTINUOUS DBL. TOP PLATES (U.N.O.).
15. PROVIDE DBL. JOISTS BELOW ALL INTERIOR WALLS 8'-0" OR GREATER IN LENGTH. PROVIDE BLOCKING @ 1/3 SPANS.
16. EACH TRUSS SHALL BE LEGIBLY BRANDED, MARKED OR OTHERWISE HAVE PERMANENTLY AFFIXED THERETO THE FOLLOWING INFORMATION LOCATED WITHIN 2 FEET OF THE CENTER OF THE SPAN ON THE FACE OF THE BOTTOM CHORD.
    A) IDENTITY OF THE COMPANY MANUFACTURING THE TRUSS.
    B) THE DESIGN LOADS
    C) THE SPACING OF THE TRUSSES.
17. FRAMING MEMBERS OR BLOCKING SHALL BE PROVIDED AT THE EDGES OF ALL SHEETS IN PLYWOOD SHEARWALLS.
18. BEAMS BEARING ON TOP PLATE SHALL BE SUPPORTED BY DBL 2x STUDS SISTER TOGETHER W/ 16d @ 16"O.C. (U.N.O.).
19. ALL SHEARWALLS SHALL EXTEND TO THE ROOF SHEATHING (U.N.O.).
20. ALL SHEAR PANELS SHALL BE APPLIED DIRECTLY TO STUDS PRIOR TO INSTALLATION OF DECORATIVE POP-OUTS AND TRIM.
21. DO NOT CUT, NOTCH, DRILL, BORE, SHAVE, TAPER OR FOR ANY REASONS MODIFY PRE-ENGINEERED / MANUFACTURED STRUCTURAL ELEMENTS SUCH AS GLUED-LAMINATED MEMBERS, PARALLAMS, MICROLLAMS, I-JOISTS, LIGHT GAUGE METAL MEMBERS AND OTHER SIMILAR TIMBER OR STEEL PRODUCTS UNLESS SUCH MODIFICATIONS ARE WITHIN THE WRITTEN PARAMETERS SET FORTH BY THE MANUFACTURER OF THAT PRODUCT OR A LETTER OF CERTIFICATION FROM THE MANUFACTURER'S ENGINEER WITH DETAIL SIGNED AND STAMPED IS ISSUED AND AUTHORIZED BY THE PROJECT ENGINEER OF RECORD AND APPROVED BY THE CITY OF GOVERNING BUILDING OFFICIAL.

CEILING JOIST SCHEDULE

CEILING JOIST SIZE & SPACING	MAX. SPAN
2 x 4 C-J @ 24"o.c.	7'-0"
2 x 6 C-J @ 24"o.c.	12'-0"
2 x 8 C-J @ 24"o.c.	16'-0"

ABBREVIATIONS

AB	ANCHOR BOLT	HOR(H)	HORIZONTAL
CLR	CLEAR	(N)	NEW
CVR	COVER	NTS	NOT TO SCALE
d	PENNY (NAILS)	OC	ON CENTER
DF	DOUGLAS FIR	PERP	PERPENDICULAR
DIA (Φ)	DIAMETER	PL (PL)	PLATE
EA	EACH	PT	PRESSURE TREATED
EMB	EMBED(MENT)	SCH	SCHEDULE
EN	EDGE NAILING	SW	SHEARWALL
ES	EACH SIDE	T & B	TOP AND BOTTOM
EW	EACH WAY	THR'D	THREADED
(E)	EXISTING	TN	TOE NAIL
FN	FIELD NAILING	TYP	TYPICAL
FTG	FOOTING	UNO	UNLESS NOTED
HD	HOLD DOWN	VIF	OTHERWISE VERIFY IN FIELD
HHS	HOLLOW STRUCTURAL SHAPE		

SOIL NOTES

THE STRUCTURE WILL BE LOCATED ENTIRELY ON UNDISTURBED NATIVE SOIL. IF THE BUILDING INSPECTOR SUSPECTS FILL, EXPANSIVE SOILS OR ANY GEOLOGIC INSTABILITY BASED UPON OBSERVATION OF THE FOUNDATION EXCAVATION, A SOILS OR GEOLOGICAL REPORT, AND RESUBMITTAL OF PLANS TO PLAN CHECK TO VERIFY THAT THE REPORT RECOMMENDATIONS HAVE BEEN INCORPORATED, MAY BE REQUIRED.

SIGNATURE OF OWNER,
LICENSED ENGINEER OR ARCHITECT

Revisions:

REGISTERED PROFESSIONAL ENGINEER
MILES T. LOVELACE
No. C 39734
Exp. 12/31/21
STATE OF CALIFORNIA

Digitally signed by Miles Lovelace
on June 30, 2020

LOVELACE ENGINEERING
Structural Engineering Services

5930 Cornerstone Ct., Ste. 100
San Diego, CA 92121
Ph. (858) 535-9111
Fax (858) 535-1989

Project Name:

NEAGLEY DEN ADDITION

2747 DALE STREET
SAN DIEGO CA, 92104

Designer:

ECO MINDED SOLUTIONS, INC.

9530 PADGETT ST. #109
SAN DIEGO CA, 92126

Job No.	20243
Cad Ref. No:	-
Date Drawn:	06-09-2020
Date Issued:	-
Proj. Engineer:	A.M.
Drawn By:	-
Checked By:	M.T.L.
Scale:	N/A

Drawing Status:

- ☐ INFORMATION DWGS. (NOT FOR CONSTRUCTION)
- ☐ PRELIMINARY DWGS. (NOT FOR CONSTRUCTION)
- ☐ DESIGN DEVELOPMENT DWGS. (NOT FOR CONSTRUCTION)
- ☐ CHECK SET (NOT FOR CONSTRUCTION)
- ☐ PROGRESS DRAWINGS (NOT FOR CONSTRUCTION)
- ☐ PLAN CHECK DRAWINGS
- ☐ BID SET DRAWINGS
- ☐ CONSTRUCTION DOCUMENTS
- ☐ OTHER

LOVELACE ENGINEERING INC. EXPRESSLY RESERVES ITS COMMON LAW COPYRIGHT AND OTHER PROPERTY RIGHTS IN THIS DOCUMENT. THIS DOCUMENT SHALL NOT BE REPRODUCED, COPIED, CHANGED OR DISCLOSED IN ANY FORM OR MANNER WHATSOEVER WITHOUT FIRST OBTAINING THE EXPRESS WRITTEN CONSENT OF LOVELACE ENGINEERING INC.
© 1994

Sheet Title:

STRUCTURAL GENERAL NOTES

Sheet Number:

S2

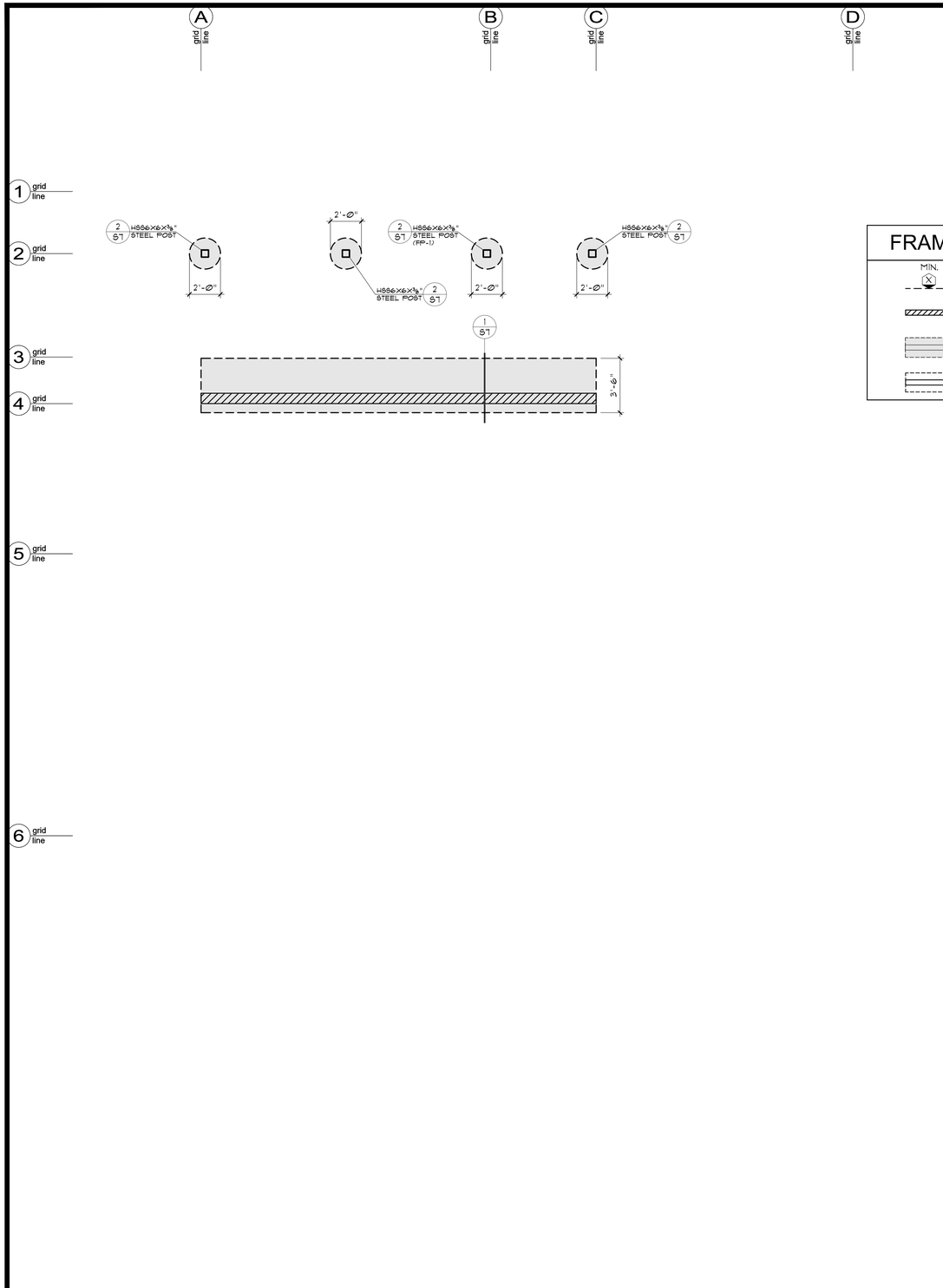

FRAMING LEGEND

MIN. X	SHEAR WALL PER PLAN
	RETAINING WALL PER PLAN
	NEW FOOTING PER PLAN
	EXISTING FOOTING PER PLAN

FOUNDATION PLAN

ALL DIMENSIONS TO BE VERIFIED WITH ARCHITECTURAL PLANS
SEE SHEET S-1 & S-2 FOR COMPLETE SHEARWALL & HOLD-DOWN SCHEDULES

SCALE: 1/4" = 1'

NORTH
FOR STRUCTURAL REFERENCE ONLY

Revisions:

REGISTERED PROFESSIONAL ENGINEER
MILES T. LOVELACE
No. C 39734
Exp. 12/31/21
STATE OF CALIFORNIA

Digitally signed by Miles Lovelace
on June 30, 2020

LOVELACE ENGINEERING
Structural Engineering Services
5930 Cornerstone Ct., Ste. 100
San Diego, CA 92121
Ph. (858) 535-9111
Fax (858) 535-1989

Project Name:
NEAGLEY DEN ADDITION
2747 DALE STREET
SAN DIEGO CA, 92104

Designer:
ECO MINDED SOLUTIONS, INC.
9530 PADGETT ST. #109
SAN DIEGO CA, 92126

Job No.	J20243
Cad Ref. No:	-
Date Drawn	06-09-2020
Date Issued:	-
Proj. Engineer:	A.M.
Drawn By:	-
Checked By:	M.T.L.
Scale:	1/4" = 1'-0"

Drawing Status:
- ☐ INFORMATION DWGS. (NOT FOR CONSTRUCTION)
- ☐ PRELIMINARY DWGS. (NOT FOR CONSTRUCTION)
- ☐ DESIGN DEVELOPMENT DWGS. (NOT FOR CONSTRUCTION)
- ☐ CHECK SET (NOT FOR CONSTRUCTION)
- ☐ PROGRESS DRAWINGS (NOT FOR CONSTRUCTION)
- ☐ PLAN CHECK DRAWINGS
- ☐ BID SET DRAWINGS
- ☐ CONSTRUCTION DOCUMENTS
- ☐ OTHER

LOVELACE ENGINEERING INC. EXPRESSLY RESERVES ITS COMMON LAW COPYRIGHT AND OTHER PROPERTY RIGHTS IN THIS DOCUMENT. THIS DOCUMENT SHALL NOT BE REPRODUCED, COPIED, CHANGED OR DISCLOSED IN ANY FORM OR MANNER WHATSOEVER WITHOUT FIRST OBTAINING THE EXPRESS WRITTEN CONSENT OF LOVELACE ENGINEERING INC.
© 1994

Sheet Title:
FOUNDATION PLAN

Sheet Number:
S3

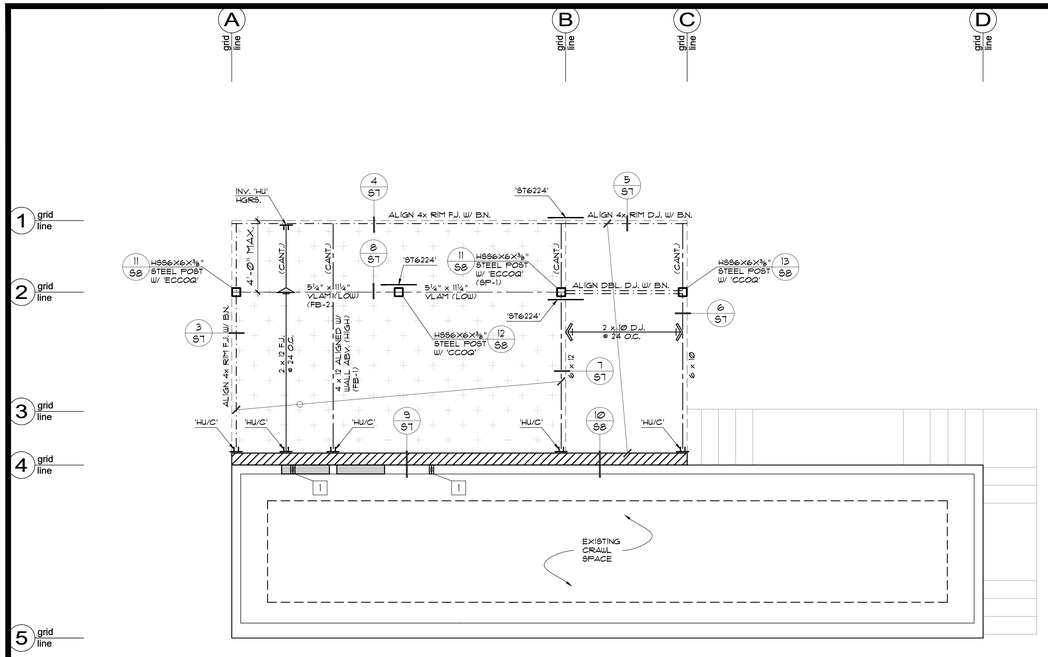

FRAMING LEGEND

- NEW WALL PER PLAN
- EXISTING WALL PER PLAN
- BEAM PER PLAN
- DROPPED BEAM PER PLAN
- ALIGN MEMBER PER PLAN W/ B.N.
- 'HU' HANGER (U.N.O.)
- HOLD-DOWN PER PLAN
- RETAINING WALL PER PLAN
- EXISTING FOOTING PER PLAN

HOLD-DOWN SCHEDULE

		MIN. POST SIZE		HOLDOWN	HOLDOWN ANCHOR BOLT	
		2x4 STUD WALL	2x6 STUD WALL		NEW FOUNDATION	EXISTING FOUNDATION (SEE NOTE J)
POST TO FOUNDATION	1	DBL. STUDS	DBL. STUDS	HDU2	SSTB20 (16 5/8" MIN. EMB.)	5/8"ø THRD. ROD W/ 10" EMBED.
	2	DBL. STUDS	DBL. STUDS	HDU4	SB5/8x24 (18" MIN. EMB.)	5/8"ø THRD. ROD W/ 10" EMBED.
	3	4x4	4x6	HDU5	SB5/8x24 (18" MIN. EMB.)	5/8"ø THRD. ROD W/ 12" EMBED.
	4	4x6	4x6	HDU8	SB7/8x24 (18" MIN. EMB.)	N/A
	5	4x6 (MAX. 10' HT.) 4x8 (GREATER THAN 10' HT.)	6x6	HDQ8	SB7/8x24 (18" MIN. EMB.)	N/A
	6	4x8 (MAX. 8' HT.) 6x6 (GREATER THAN 8' HT.)	6x6	HDU14	SB1x30 (24" MIN. EMB.)	N/A
	7	PREFABRICATED SHEARWALL HOLDOWN PER DETAILS				
POST TO POST / BEAM	8	DBL. 2x STUDS W/ MSTC40 (V) TO DBL. STUDS/ DROPPED BEAM / HEADER BELOW (14-16d SINKER NAILS INTO STUDS)				
	9	DBL. 2x STUDS W/ MSTC52 (V) TO DBL. STUDS BELOW (22-16d SINKER NAILS INTO STUDS)				
	10	4x POST W/ MSTC66 (V) TO 4x POST BELOW (32-16d SINKER NAILS INTO POST)				
	11	DBL. 2x STUDS W/ MSTC28 (V) TO BEAM BELOW (16-16d SINKER NAILS MIN. INTO STUDS)				
	12	4x POST W/ MSTC48B3 (V) TO BEAM BELOW (38-10d NAILS MIN. INTO POST)				
	13	4x6 POST (2x4 WALL) OR 6x6 POST (2x6 WALL) W/ (2) ST6236 (V) TO BEAM BELOW (14-16d NAILS MIN. INTO POST) (EACH STRAP)				
	14	DBL. 2x STUDS W/ MSTC66B3 (V) TO DROPPED BEAM / HEADER BELOW (38-10d NAILS MIN. INTO STUDS)				

FLOOR FRAMING PLAN

ALL DIMENSIONS TO BE VERIFIED WITH ARCHITECTURAL PLANS
SEE SHEET S-1 & S-2 FOR COMPLETE SHEARWALL & HOLD-DOWN SCHEDULES

SCALE: 1/4" = 1'

NORTH
FOR STRUCTURAL REFERENCE ONLY

Revisions:

REGISTERED PROFESSIONAL ENGINEER
MILES T. LOVELACE
No. C 39734
Exp. 12/31/21
STATE OF CALIFORNIA

Digitally signed by Miles Lovelace
on June 30, 2020

LOVELACE ENGINEERING
Structural Engineering Services
5930 Cornerstone Ct., Ste. 100
San Diego, CA 92121
Ph. (858) 535-9111
Fax (858) 535-1989

Project Name:
NEAGLEY DEN ADDITION
2747 DALE STREET
SAN DIEGO CA, 92104

Designer:
ECO MINDED SOLUTIONS, INC.
9530 PADGETT ST. #109
SAN DIEGO CA, 92126

Job No.	J20243
Cad Ref. No:	-
Date Drawn	06-09-2020
Date Issued:	-
Proj. Engineer:	A.M.
Drawn By:	-
Checked By:	M.T.L.
Scale:	1/4" = 1'-0"

Drawing Status:
- ☐ INFORMATION DWGS. (NOT FOR CONSTRUCTION)
- ☐ PRELIMINARY DWGS. (NOT FOR CONSTRUCTION)
- ☐ DESIGN DEVELOPMENT DWGS. (NOT FOR CONSTRUCTION)
- ☐ CHECK SET (NOT FOR CONSTRUCTION)
- ☐ PROGRESS DRAWINGS (NOT FOR CONSTRUCTION)
- ☐ PLAN CHECK DRAWINGS
- ☐ BID SET DRAWINGS
- ☐ CONSTRUCTION DOCUMENTS
- ☐ OTHER

LOVELACE ENGINEERING INC. EXPRESSLY RESERVES ITS COMMON LAW COPYRIGHT AND OTHER PROPERTY RIGHTS IN THIS DOCUMENT. THIS DOCUMENT SHALL NOT BE REPRODUCED, COPIED, CHANGED OR DISCLOSED IN ANY FORM OR MANNER WHATSOEVER WITHOUT FIRST OBTAINING THE EXPRESS WRITTEN CONSENT OF LOVELACE ENGINEERING INC.
© 1994

Sheet Title:
FLOOR FRAMING PLAN

Sheet Number:
S4

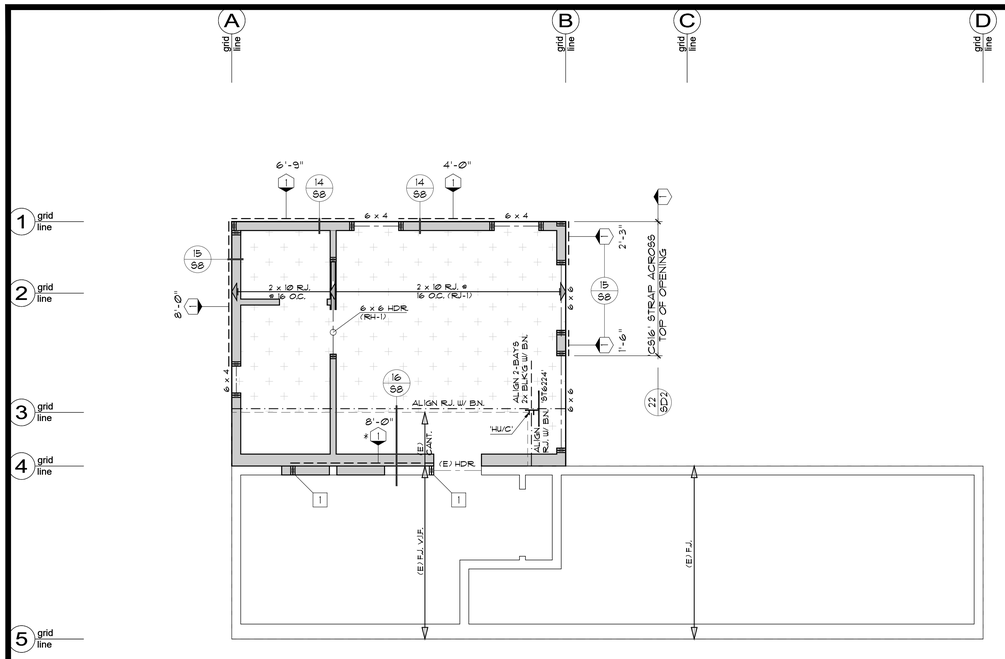

SHEARWALL SCHEDULE - 2019 CBC (SEE NOTES 1-13)

SYMBOL	SHEAR (PLF)	MATERIAL AND NAILING DESCRIPTION	ANCHOR BOLT SCHED. & SILL PLATE SIZE (SEE NOTES 9-12)	BOTTOM PLATE SIZE & NAILING	SHEAR TRANSFER @ RIM JOIST/BLK'G (SEE NOTE 15)
1	260	3/8" CDX PLYWOOD W/ 8d @ 6"o.c. EN. / 12"o.c. FN.	2x P.T. SILL PL. W/ 1/2"ø A.B. @ 36"o.c. OR 5/8"ø A.B. @ 48"o.c.	2x PLATE W/ 16d @ 6"o.c. (SEE NOTE 16)	A35 OR LTP4 @ 24"o.c.
2	350	3/8" CDX PLYWOOD W/ 8d @ 4"o.c. EN. / 12"o.c. FN.	2x P.T. SILL PL. W/ 1/2"ø A.B. @ 24"o.c. OR 5/8"ø A.B. @ 32"o.c.	2x PLATE W/ 16d @ 4"o.c. (SEE NOTE 16)	A35 OR LTP4 @ 16"o.c.
3	490	3/8" CDX PLYWOOD W/ 8d @ 3"o.c. EN. / 12"o.c. FN. (SEE NOTE 14)	2x P.T. SILL PL. W/ 1/2"ø A.B. @ 16"o.c. OR 5/8"ø A.B. @ 24"o.c.	2x PLATE W/ 16d @ 3"o.c. (SEE NOTE 16)	A35 OR LTP4 @ 12"o.c.
4	640	3/8" CDX PLYWOOD W/ 8d @ 2"o.c. EN. / 12"o.c. FN. (SEE NOTE 14)	2x P.T. SILL PL. W/ 1/2"ø A.B. @ 12"o.c. OR 5/8"ø A.B. @ 20"o.c.	2x PL. W/ 1/2"ø x 8" LONG LAG SCREWS @ 10"o.c. INTO 4x RIM JOIST/BLK'G	A35 OR LTP4 @ 10"o.c.
5	730	3/8" STRUCT I PLYWOOD W/ 8d @ 2"o.c. EN. / 12"o.c. FN. (SEE NOTE 14)	2x P.T. SILL PL. W/ 1/2"ø A.B. @ 8"o.c. OR 5/8"ø A.B. @ 16"o.c.	2x PL. W/ 1/2"ø x 8" LONG LAG SCREWS @ 8"o.c. INTO 4x RIM JOIST/BLK'G	A35 OR LTP4 @ 9"o.c.
6	860	15/32" STRUCT I PLYWOOD W/ 10d @ 2"o.c. EN. / 12"o.c. FN. (SEE NOTE 14)	3x P.T. SILL PL. W/ 1/2"ø A.B. @ 12"o.c. OR 5/8"ø A.B. @ 20"o.c.	3x PL. W/ 1/2"ø x 8" LONG LAG SCREWS @ 6"o.c. INTO 4x RIM JOIST/BLK'G	A35 OR LTP4 @ 8"o.c.
7	1100	3/8" STRUCT I PLYWOOD (BOTH SIDES) W/ 10d @ 3"o.c. EN. / 12"o.c. FN. (SEE NOTE 11 AND DETAIL 9/SD1)	3x P.T. SILL PL. W/ 1/2"ø A.B. @ 8"o.c. OR 5/8"ø A.B. @ 12"o.c.	3x PL. W/ 1/2"ø x 8" LONG LAG SCREWS @ 5"o.c. INTO 4x RIM JOIST/BLK'G	A35 OR LTP4 @ 6"o.c.
8	1460	3/8" STRUCT I PLYWOOD (BOTH SIDES) W/ 10d @ 2"o.c. EN. / 12"o.c. FN. (SEE NOTE 11 AND DETAIL 9/SD1)	3x P.T. SILL PL. W/ 1/2"ø A.B. @ 6"o.c. OR 5/8"ø A.B. @ 9"o.c.	3x PL. W/ 1/2"ø x 8" LONG LAG SCREWS @ 4"o.c. INTO 4x RIM JOIST/BLK'G	A35 OR LTP4 @ 5"o.c.
9	1740	1/2" STRUCT I PLYWOOD (BOTH SIDES) W/ 10d @ 2"o.c. EN. / 12"o.c. FN. (SEE NOTE 11 AND DETAIL 9/SD1)	3x P.T. SILL PL. W/ 5/8"ø A.B. @ 6"o.c. OR 3/4"ø A.B. @ 10"o.c.	3x PL. W/ 5/8"ø x 8" LONG LAG SCREWS @ 4"o.c. INTO 4x RIM JOIST/BLK'G	HGA10KY @ 8" o.c. OR LTP4 @ 4"o.c.

FRAMING LEGEND

- MIN. — SHEAR WALL PER PLAN
- NEW WALL PER PLAN
- EXISTING WALL PER PLAN
- BEAM PER PLAN
- DROPPED BEAM PER PLAN
- ALIGN MEMBER PER PLAN W/ B.N.
- 'HU' HANGER (U.N.O.)
- HOLD-DOWN PER PLAN

HOLD-DOWN SCHEDULE

		MIN. POST SIZE		HOLDOWN	HOLDOWN ANCHOR BOLT	
		2x4 STUD WALL	2x6 STUD WALL		NEW FOUNDATION	EXISTING FOUNDATION (SEE NOTE 3)
POST TO FOUNDATION	1	DBL. STUDS	DBL. STUDS	HDU2	SSTB20 (16 5/8" MIN. EMB.)	5/8"ø THRD. ROD W/ 10" EMBED.
	2	DBL. STUDS	DBL. STUDS	HDU4	SB5/8x24 (18" MIN. EMB.)	5/8"ø THRD. ROD W/ 10" EMBED.
	3	4x4	4x6	HDU5	SB5/8x24 (18" MIN. EMB.)	5/8"ø THRD. ROD W/ 12" EMBED.
	4	4x6	4x6	HDU8	SB7/8x24 (18" MIN. EMB.)	N/A
	5	4x6 (MAX. 10' HT.) 4x8 (GREATER THAN 10' HT.)	6x6	HDQ8	SB7/8x24 (18" MIN. EMB.)	N/A
	6	4x8 (MAX. 8' HT.) 6x6 (GREATER THAN 8' HT.)	6x6	HDU14	SB1x30 (24" MIN. EMB.)	N/A
	7	PREFABRICATED SHEARWALL HOLDOWN PER DETAILS				
POST TO POST / BEAM	8	DBL. 2x STUDS W/ MSTC40 (V) TO DBL. STUDS/ DROPPED BEAM / HEADER BELOW (14-16d SINKER NAILS INTO STUDS)				
	9	DBL. 2x STUDS W/ MSTC52 (V) TO DBL. STUDS BELOW (22-16d SINKER NAILS INTO STUDS)				
	10	4x POST W/ MSTC66 (V) TO 4x POST BELOW (32-16d SINKER NAILS INTO POST)				
	11	DBL. 2x STUDS W/ MSTC28 (V) TO BEAM BELOW (16-16d SINKER NAILS MIN. INTO STUDS)				
	12	4x POST W/ MSTC48B3 (V) TO BEAM BELOW (38-10d NAILS MIN. INTO POST)				
	13	4x6 POST (2x4 WALL) OR 6x6 POST (2x6 WALL) W/ (2) ST6236 (V) TO BEAM BELOW (14-16d NAILS MIN. INTO POST) (EACH STRAP)				
	14	DBL. 2x STUDS W/ MSTC66B3 (V) TO DROPPED BEAM / HEADER BELOW (38-10d NAILS MIN. INTO STUDS)				

6 grid line

FLOOR FRAMING PLAN

ALL DIMENSIONS TO BE VERIFIED WITH ARCHITECTURAL PLANS
SEE SHEET S-1 & S-2 FOR COMPLETE SHEARWALL & HOLD-DOWN SCHEDULES

SCALE: 1/4" = 1'

NORTH
FOR STRUCTURAL REFERENCE ONLY

Revisions:

REGISTERED PROFESSIONAL ENGINEER
MILES T. LOVELACE
No. C 39734
Exp. 12/31/21
STATE OF CALIFORNIA

Digitally signed by Miles Lovelace
on June 30, 2020

LOVELACE ENGINEERING
Structural Engineering Services

5930 Cornerstone Ct., Ste. 100
San Diego, CA 92121
Ph. (858) 535-9111
Fax (858) 535-1989

Project Name:
NEAGLEY DEN ADDITION
2747 DALE STREET
SAN DIEGO CA, 92104

Designer:
ECO MINDED SOLUTIONS, INC.
9530 PADGETT ST. #109
SAN DIEGO CA, 92126

Job No.	J20243
Cad Ref. No:	-
Date Drawn	06-09-2020
Date Issued:	-
Proj. Engineer:	A.M.
Drawn By:	-
Checked By:	M.T.L.
Scale:	1/4" = 1'-0"

Drawing Status:
- ☐ INFORMATION DWGS. (NOT FOR CONSTRUCTION)
- ☐ PRELIMINARY DWGS. (NOT FOR CONSTRUCTION)
- ☐ DESIGN DEVELOPMENT DWGS. (NOT FOR CONSTRUCTION)
- ☐ CHECK SET (NOT FOR CONSTRUCTION)
- ☐ PROGRESS DRAWINGS (NOT FOR CONSTRUCTION)
- ☐ PLAN CHECK DRAWINGS
- ☐ BID SET DRAWINGS
- ☐ CONSTRUCTION DOCUMENTS
- ☐ OTHER_____

LOVELACE ENGINEERING INC. EXPRESSLY RESERVES ITS COMMON LAW COPYRIGHT AND OTHER PROPERTY RIGHTS IN THIS DOCUMENT. THIS DOCUMENT SHALL NOT BE REPRODUCED, COPIED, CHANGED OR DISCLOSED IN ANY FORM OR MANNER WHATSOEVER WITHOUT FIRST OBTAINING THE EXPRESS WRITTEN CONSENT OF LOVELACE ENGINEERING INC.
© 1994

Sheet Title:
FLOOR FRAMING PLAN

Sheet Number:
S5

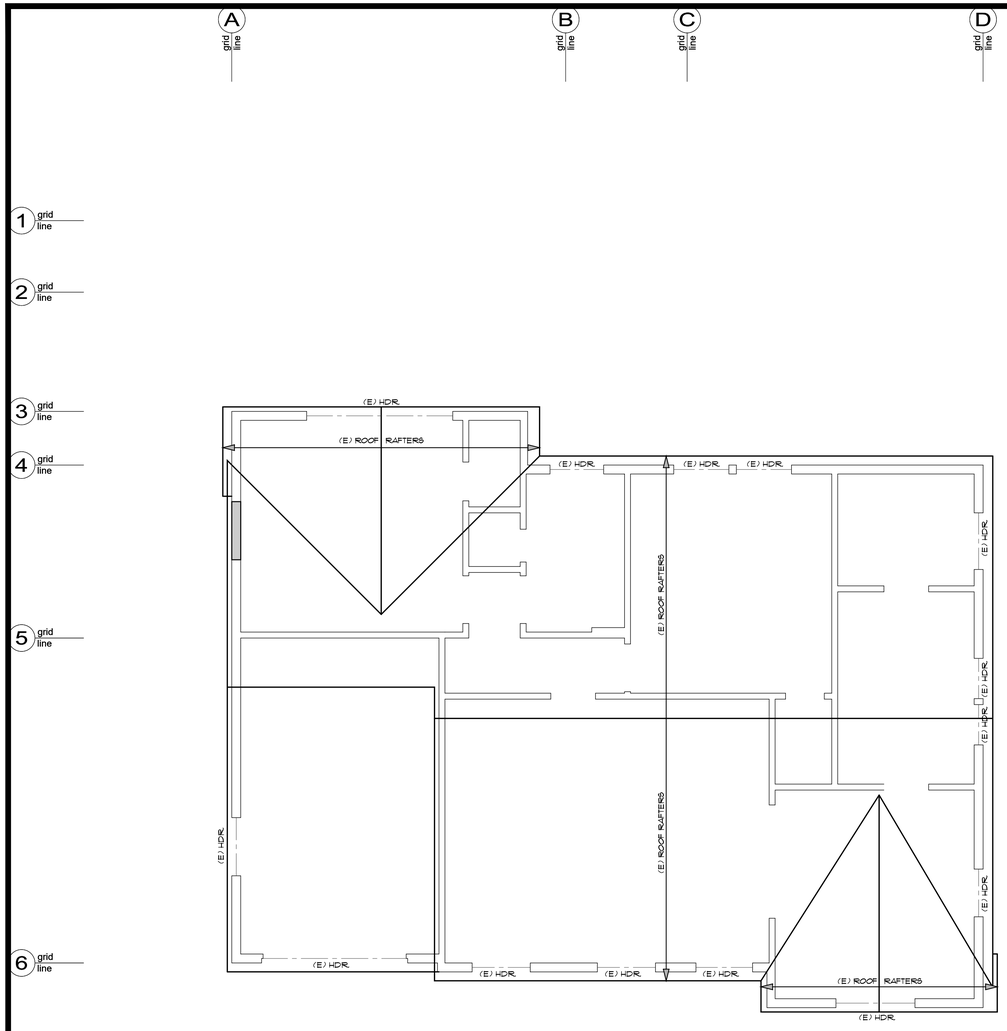

NOTICE

NO CHANGES REQUIRED TO THIS LEVEL. ROOF FRAMING PLAN IS FOR REFERENCE ONLY. VERIFY FRAMING IN FIELD WHERE REQ'D.

ROOF FRAMING PLAN

ALL DIMENSIONS TO BE VERIFIED WITH ARCHITECTURAL PLANS
SEE SHEET S-1 & S-2 FOR COMPLETE SHEARWALL & HOLD-DOWN SCHEDULES

NORTH
FOR STRUCTURAL REFERENCE ONLY

SCALE: ¼" = 1'

Revisions:

REGISTERED PROFESSIONAL ENGINEER
MILES T. LOVELACE
No. C 39734
Exp. 12/31/21
STATE OF CALIFORNIA

Digitally signed by Miles Lovelace
on June 30, 2020

LOVELACE ENGINEERING
Structural Engineering Services

5930 Cornerstone Ct., Ste. 100
San Diego, CA 92121
Ph. (858) 535-9111
Fax (858) 535-1989

Project Name:

NEAGLEY DEN ADDITION

2747 DALE STREET
SAN DIEGO CA, 92104

Designer:

ECO MINDED SOLUTIONS, INC.

9530 PADGETT ST. #109
SAN DIEGO CA, 92126

Job No.	J20243
Cad Ref. No:	-
Date Drawn	06-09-2020
Date Issued:	-
Proj. Engineer:	A.M.
Drawn By:	-
Checked By:	M.T.L.
Scale:	¼" = 1'-0"

Drawing Status:

- ☐ INFORMATION DWGS. (NOT FOR CONSTRUCTION)
- ☐ PRELIMINARY DWGS. (NOT FOR CONSTRUCTION)
- ☐ DESIGN DEVELOPMENT DWGS. (NOT FOR CONSTRUCTION)
- ☐ CHECK SET (NOT FOR CONSTRUCTION)
- ☐ PROGRESS DRAWINGS (NOT FOR CONSTRUCTION)
- ☐ PLAN CHECK DRAWINGS
- ☐ BID SET DRAWINGS
- ☐ CONSTRUCTION DOCUMENTS
- ☐ OTHER

LOVELACE ENGINEERING INC. EXPRESSLY RESERVES ITS COMMON LAW COPYRIGHT AND OTHER PROPERTY RIGHTS IN THIS DOCUMENT. THIS DOCUMENT SHALL NOT BE REPRODUCED, COPIED, CHANGED OR DISCLOSED IN ANY FORM OR MANNER WHATSOEVER WITHOUT FIRST OBTAINING THE EXPRESS WRITTEN CONSENT OF LOVELACE ENGINEERING INC.
© 1994

Sheet Title:

ROOF FRAMING PLAN

Sheet Number:

S6

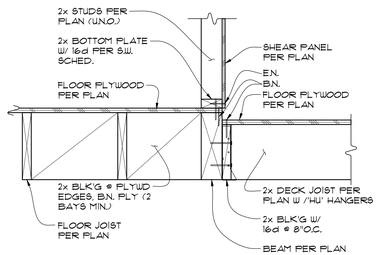

SHEAR TRANSFER DETAIL 7

N WD FL 2x DK IN FP

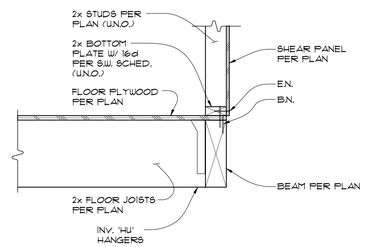

SHEAR TRANSFER DETAIL 4

N WD FL 2x EX PE 6

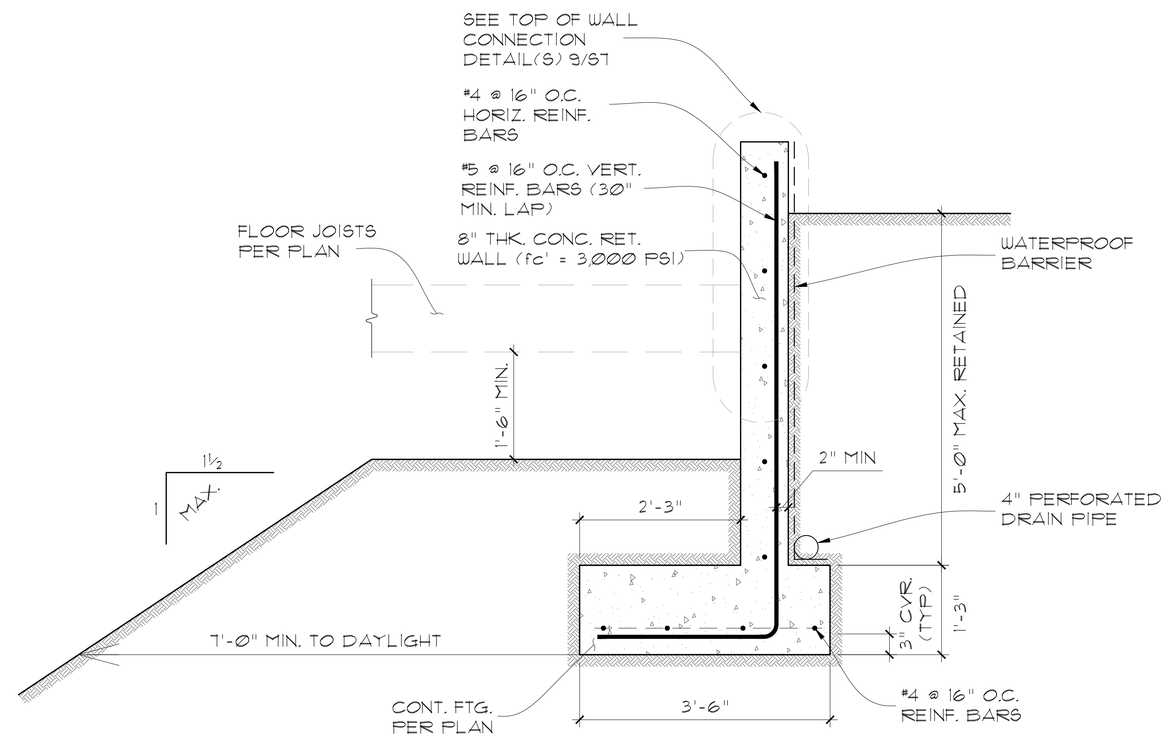

RETAINING WALL DETAIL 1

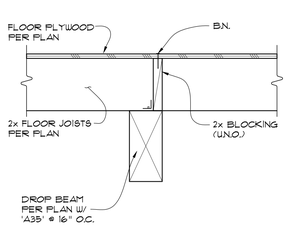

SHEAR TRANSFER DETAIL 8

N WD FL 2x DK IN PE

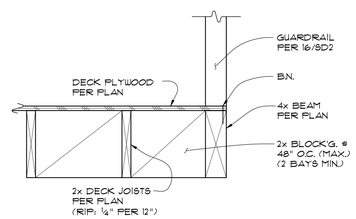

SHEAR TRANSFER DETAIL 5

N WD FL 2x DK EX PA

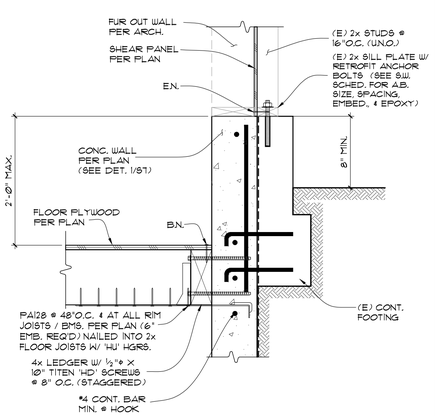

SHEAR TRANSFER DETAIL 9

N MA WA TOW

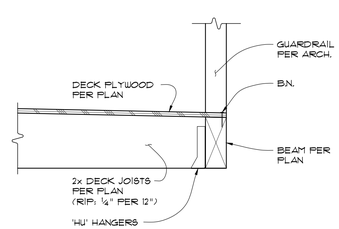

SHEAR TRANSFER DETAIL 6

N WD FL 2x DK EX PE

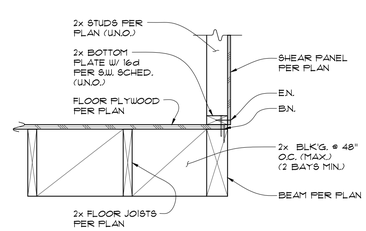

SHEAR TRANSFER DETAIL 3

N WD FL 2x EX PA

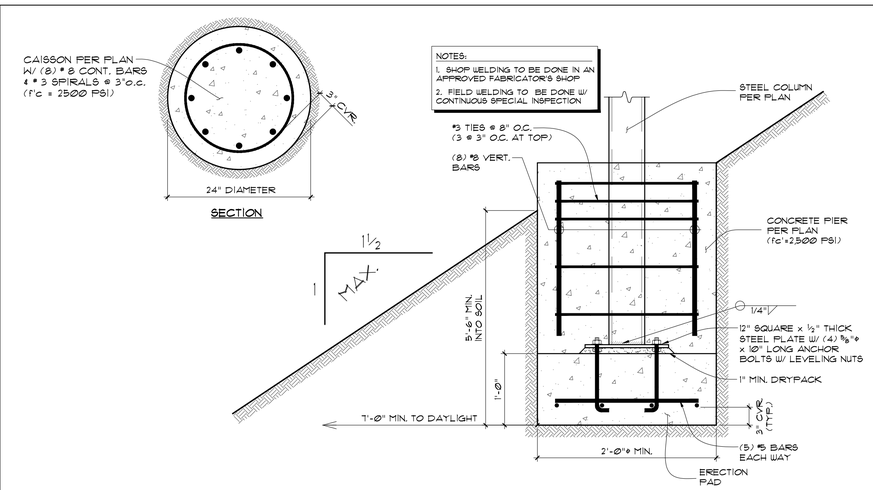

FLAGPOLE FOOTING 2

N FN FP 3

Revisions:

△	
△	
△	
△	
△	
△	

REGISTERED PROFESSIONAL ENGINEER MILES T. LOVELACE No. C 39734 Exp. 12/31/21 STATE OF CALIFORNIA

Digitally signed by Miles Lovelace on June 30, 2020

LOVELACE ENGINEERING
Structural Engineering Services
5930 Cornerstone Ct., Ste. 100
San Diego, CA 92121
Ph. (858) 535-9111
Fax (858) 535-1989

Project Name:
NEAGLEY DEN ADDITION
2747 DALE STREET
SAN DIEGO CA, 92104

Designer:
ECO MINDED SOLUTIONS, INC.
9530 PADGETT ST. #109
SAN DIEGO CA, 92126

Job No.	J20243
Cad Ref. No:	-
Date Drawn:	06-09-2020
Date Issued:	-
Proj. Engineer:	A.M.
Drawn By:	-
Checked By:	M.T.L.
Scale:	N.T.S.

Drawing Status:
- ☐ INFORMATION DWGS. (NOT FOR CONSTRUCTION)
- ☐ PRELIMINARY DWGS. (NOT FOR CONSTRUCTION)
- ☐ DESIGN DEVELOPMENT DWGS. (NOT FOR CONSTRUCTION)
- ☐ CHECK SET (NOT FOR CONSTRUCTION)
- ☐ PROGRESS DRAWINGS (NOT FOR CONSTRUCTION)
- ☐ PLAN CHECK DRAWINGS
- ☐ BID SET DRAWINGS
- ☐ CONSTRUCTION DOCUMENTS
- ☐ OTHER_____

LOVELACE ENGINEERING INC. EXPRESSLY RESERVES ITS COMMON LAW COPYRIGHT AND OTHER PROPERTY RIGHTS IN THIS DOCUMENT. THIS DOCUMENT SHALL NOT BE REPRODUCED, COPIED, CHANGED OR DISCLOSED IN ANY FORM OR MANNER WHATSOEVER WITHOUT FIRST OBTAINING THE EXPRESS WRITTEN CONSENT OF LOVELACE ENGINEERING INC. © 1994

Sheet Title:
STRUCTURAL DETAILS

Sheet Number:
S7

BLANK

BLANK

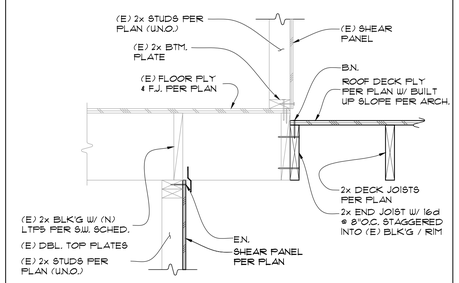

SHEAR TRANSFER DETAIL 16

RE WD FL 2x DK FP

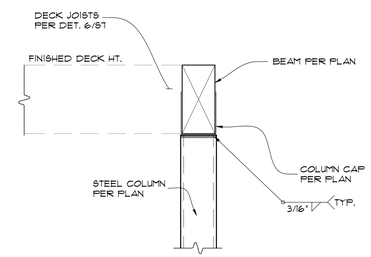

CONNECTION DETAIL 13

N ST CO

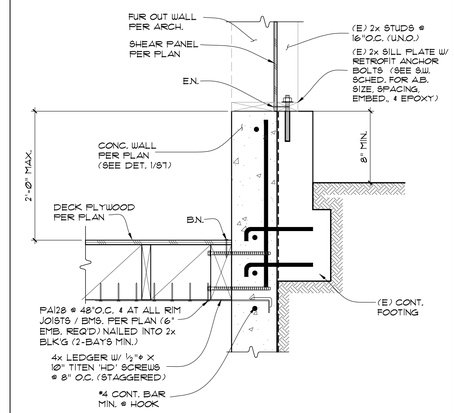

SHEAR TRANSFER DETAIL 10

N MA WA TOW

BLANK

BLANK

BLANK

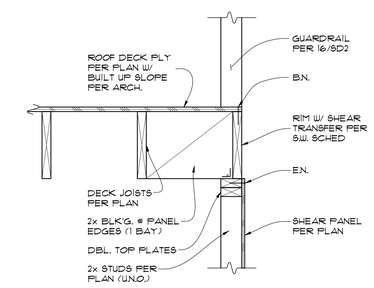

SHEAR TRANSFER DETAIL 14

N WD FL 2x DK EX PA

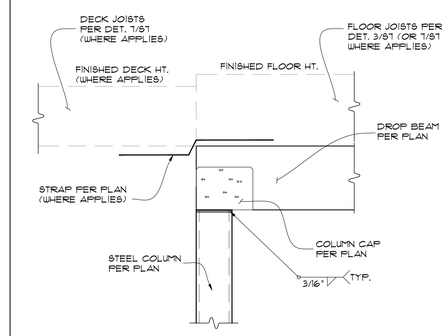

CONNECTION DETAIL 11

N ST CO

BLANK

BLANK

BLANK

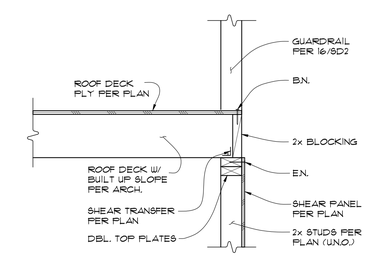

SHEAR TRANSFER DETAIL 15

N WD FL 2x DK EX PE

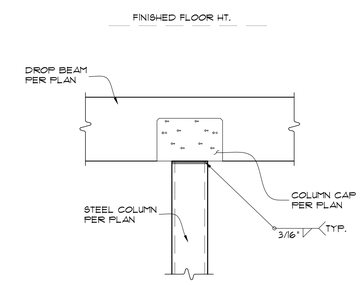

CONNECTION DETAIL 12

N ST CO

Revisions:

REGISTERED PROFESSIONAL ENGINEER MILES T. LOVELACE No. C 39734 Exp. 12/31/21 STATE OF CALIFORNIA

Digitally signed by Miles Lovelace on June 30, 2020

LOVELACE ENGINEERING
Structural Engineering Services
5930 Cornerstone Ct., Ste. 100
San Diego, CA 92121
Ph. (858) 535-9111
Fax (858) 535-1989

Project Name:
NEAGLEY DEN ADDITION
2747 DALE STREET
SAN DIEGO CA, 92104

Designer:
ECO MINDED SOLUTIONS, INC.
9530 PADGETT ST. #109
SAN DIEGO CA, 92126

Job No.	J20243
Cad Ref. No:	-
Date Drawn	06-09-2020
Date Issued:	-
Proj. Engineer:	A.M.
Drawn By:	-
Checked By:	M.T.L.
Scale:	N.T.S.

Drawing Status:
- ☐ INFORMATION DWGS. (NOT FOR CONSTRUCTION)
- ☐ PRELIMINARY DWGS. (NOT FOR CONSTRUCTION)
- ☐ DESIGN DEVELOPMENT DWGS. (NOT FOR CONSTRUCTION)
- ☐ CHECK SET (NOT FOR CONSTRUCTION)
- ☐ PROGRESS DRAWINGS (NOT FOR CONSTRUCTION)
- ☐ PLAN CHECK DRAWINGS
- ☐ BID SET DRAWINGS
- ☐ CONSTRUCTION DOCUMENTS
- ☐ OTHER

LOVELACE ENGINEERING INC. EXPRESSLY RESERVES ITS COMMON LAW COPYRIGHT AND OTHER PROPERTY RIGHTS IN THIS DOCUMENT. THIS DOCUMENT SHALL NOT BE REPRODUCED, COPIED, CHANGED OR DISCLOSED IN ANY FORM OR MANNER WHATSOEVER WITHOUT FIRST OBTAINING THE EXPRESS WRITTEN CONSENT OF LOVELACE ENGINEERING INC. © 1994

Sheet Title:
STRUCTURAL DETAILS

Sheet Number:
S8

NOTES:

1. "D" EQUALS DEPTH OF FOOTINGS PER PLANS & DETAILS.
2. REINFORCING TO MATCH SIZE & SPACING OF FOOTING REINF.
3. SLOPE OF STEPS TO BE 1 VERT. TO 2 HORIZ. (MAX. SLOPE) U.O.N.

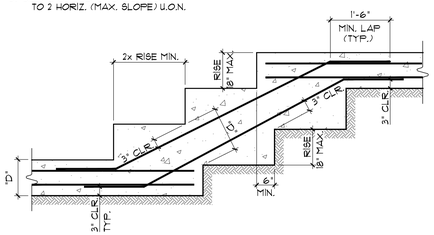

TYPICAL STEPPED FOOTING 13

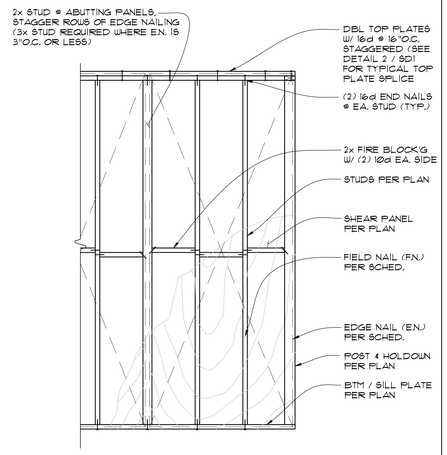

TYPICAL SHEARWALL DETAIL 10

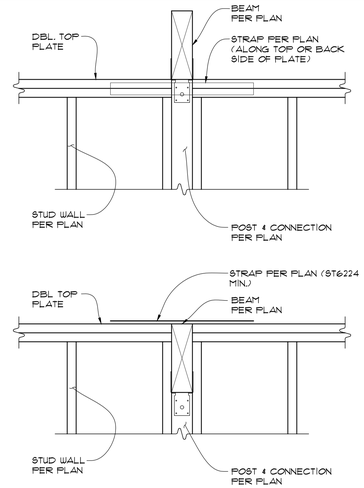

TYPICAL BEAM CONN. 7

NOTE:
INTERMEDIATE SUPPORT FOR 2x6 CAL FILL TO BE PROVIDED @ 6'-0" O.C. MAX.

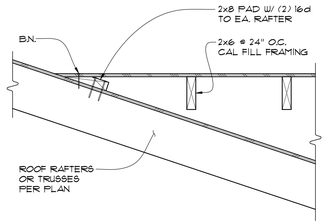

TYPICAL CAL FILL FRAMING 4

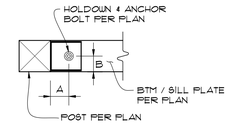

TOP VIEW

HOLDOWN	A	B	ANCHOR BOLT (U.N.O.)
HDU2	1 1/4"	1 3/4"	SSTB20 (16 5/8" MIN. EMB.)
HDU4	1 1/4"	1 3/4"	SB5/8x24 (18" MIN. EMB.)
HDU5	1 1/4"	1 3/4"	SB5/8x24 (18" MIN. EMB.)
HDU8	1 1/4"	1 3/4"	SB7/8x24 (18" MIN. EMB.)
HDQ8	1 1/4"	1 3/4"	SB7/8x24 (18" MIN. EMB.)
HDU14	1 9/16"	1 3/4"	SB1x30 (24" MIN. EMB.)

NOTES:

A. HOLDOWN CONNECTORS INTO WOOD FRAMING REQUIRE APPROVED PLATE WASHER, AND HOLDOWNS SHALL BE TIGHTENED JUST PRIOR TO COVERING THE WALL FRAMING.

B. INCREASE FOUNDATION DEPTH FOR ENTIRE SHEAR WALL LENGTH WHERE NECESSARY TO ACCOMMODATE THE REQUIRED ANCHOR BOLT EMBEDMENT & CLEARANCE. ANCHOR BOLTS SHALL BE 3" CLEAR FROM SOIL

C. USE SIMPSON 'CNW' COUPLER NUT & THRD'D ROD FOR RAISED WOOD FLOOR APPLICATIONS, PROVIDE 4x BLK'G UNDER POST.

D. REFER TO SIMPSON CATALOG FOR PROPER INSTALLATION REQUIREMENTS.

TYP. HOLDOWN PLACEMENT 1

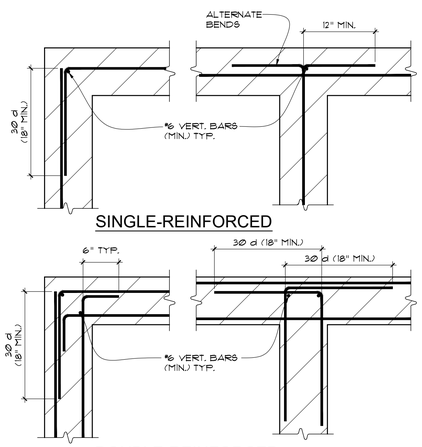

TYP. REBAR LAPS @ WALLS 14

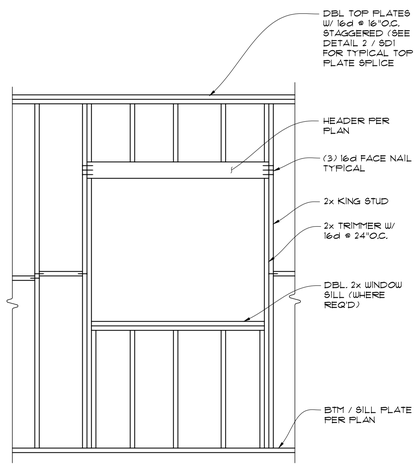

TYPICAL OPENING IN WALL 11

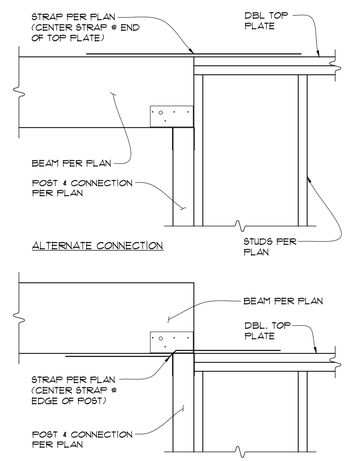

TYPICAL BEAM CONN. 8

STUD	BEARING & EXT. WALL		NON-BEARING	
	"N"	"D"	"N"	"D"
2x4	7/8"	1 3/8"	1 3/8"	2"
2x6	1 3/8"	2 1/8"	2 1/8"	3 1/4"
2x8	1 7/8"	3"	3"	4 1/2"
2x10	2 3/8"	3 3/4"	3 3/4"	5 5/8"

NOTES:

1. ONLY ONE MAX. SIZE NOTCH OR BORED HOLE IS ALLOWED PER STUD
2. BORED HOLES SHALL NOT BE LOCATED IN THE SAME SECTION OF STUD AS A CUT OR NOTCH.
3. NON-BEARING WALL IS DEFINED AS A WALL SUPPORTING NO LOAD OTHER THAN ITS OWN WEIGHT.

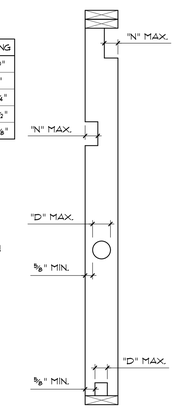

TYPICAL STUD NOTCH 5

NOTE:
PROVIDE MSTC28 OR 2-CS16x26" STRAPS ACROSS ALL DISCONTINUOUS TOP PLATES.

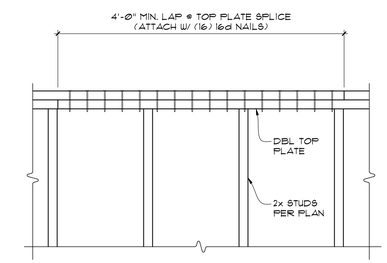

TYP. TOP PLATE SPLICE 2

BEND DIAMETERS				
STIRRUPS AND TIES		ALL OTHERS		
#3-#5 BARS	#6-#8 BARS	#3-#8 BARS	#9-#11 BARS	#14-#18 BARS
4 db	6 db	6 db	8 db	10 db

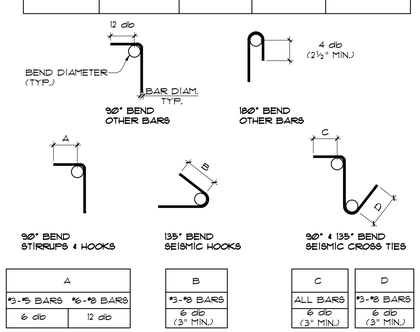

A	
#3-#5 BARS	#6-#8 BARS
6 db	12 db

B
#3-#8 BARS
6 db (3" MIN.)

C	D
ALL BARS	#3-#8 BARS
6 db (3" MIN.)	6 db (3" MIN.)

STANDARD HOOKS & BENDS 15

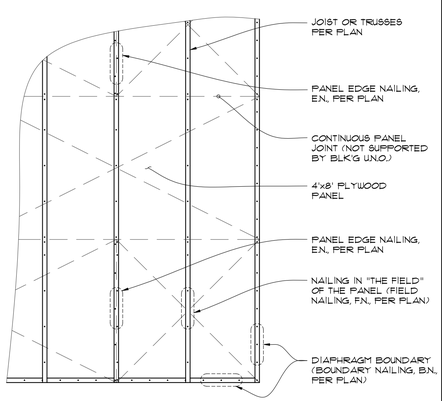

TYP. PLYWOOD DIAPHRAGM 12

SEE WOOD NOTES # 18 AT SHEET S1 FOR ADDITIONAL REQUIREMENTS.

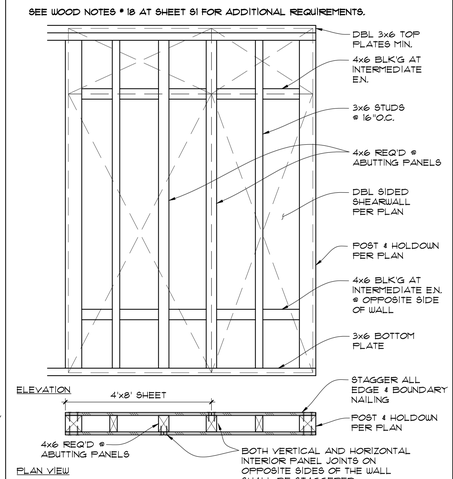

DBL SIDED SHEARWALL 9

N WD WL 1

JOIST	NOTCH & BORED HOLE (MAX.)		
	"EN"	"N"	"D"
2x6	1 3/8"	7/8"	1 3/4" DIA.
2x8	1 7/8"	1 1/4"	2 1/2" DIA.
2x10	2 3/8"	1 1/2"	3 1/8" DIA.
2x12	2 7/8"	1 7/8"	3 3/4" DIA.
2x14	3 3/8"	2 1/8"	4 1/2" DIA.

NOTE: FOR COMPOSITE LUMBER, SEE MANUFACTURER'S RECOMMENDATIONS.

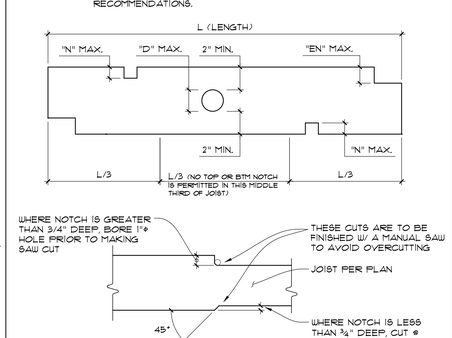

TYPICAL JOIST NOTCH 6

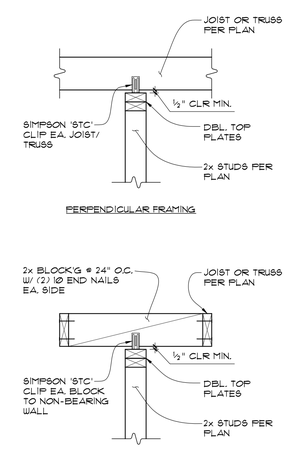

NON-BEARING WALL CONN. 3

Revisions:

REGISTERED PROFESSIONAL ENGINEER
MILES T. LOVELACE
No. C 39734
Exp. 12/31/21
STATE OF CALIFORNIA

Digitally signed by Miles Lovelace
on June 30, 2020

LOVELACE ENGINEERING
Structural Engineering Services

5930 Cornerstone Ct., Ste. 100
San Diego, CA 92121
Ph. (858) 535-9111
Fax (858) 535-1989

Project Name:
NEAGLEY DEN ADDITION

2747 DALE STREET
SAN DIEGO CA, 92104

Designer:
ECO MINDED SOLUTIONS, INC.

9530 PADGETT ST. #109
SAN DIEGO CA, 92126

Job No.	J20243
Cad Ref. No:	-
Date Drawn:	06-09-2020
Date Issued:	-
Proj. Engineer:	A.M.
Drawn By:	-
Checked By:	M.T.L.
Scale:	N.T.S.

Drawing Status:
- ☐ INFORMATION DWGS. (NOT FOR CONSTRUCTION)
- ☐ PRELIMINARY DWGS. (NOT FOR CONSTRUCTION)
- ☐ DESIGN DEVELOPMENT DWGS. (NOT FOR CONSTRUCTION)
- ☐ CHECK SET (NOT FOR CONSTRUCTION)
- ☐ PROGRESS DRAWINGS (NOT FOR CONSTRUCTION)
- ☐ PLAN CHECK DRAWINGS
- ☐ BID SET DRAWINGS
- ☐ CONSTRUCTION DOCUMENTS
- ☐ OTHER

LOVELACE ENGINEERING INC. EXPRESSLY RESERVES ITS COMMON LAW COPYRIGHT AND OTHER PROPERTY RIGHTS IN THIS DOCUMENT. THIS DOCUMENT SHALL NOT BE REPRODUCED, COPIED, CHANGED OR DISCLOSED IN ANY FORM OR MANNER WHATSOEVER WITHOUT FIRST OBTAINING THE EXPRESS WRITTEN CONSENT OF LOVELACE ENGINEERING INC.
© 1994

Sheet Title:
STANDARD STRUCTURAL DETAILS

Sheet Number:
SD1

BLANK

BLANK

BLANK

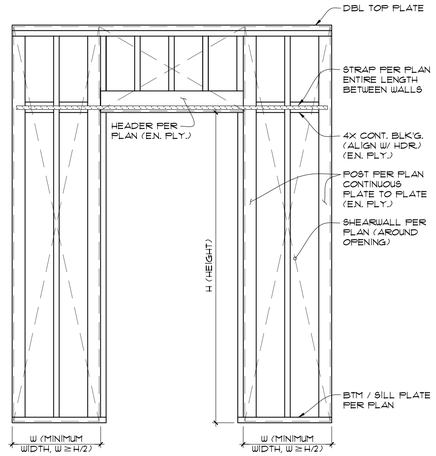

SHEARWALL STRAP DETAIL 22

N WD WL DR

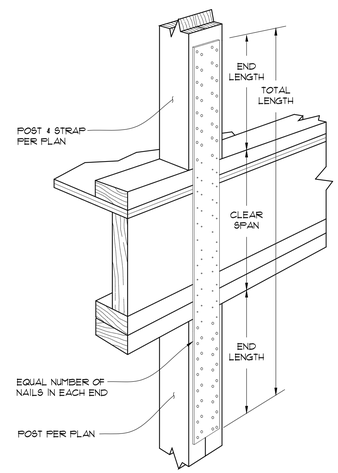

VERTICAL STRAP DETAIL 19

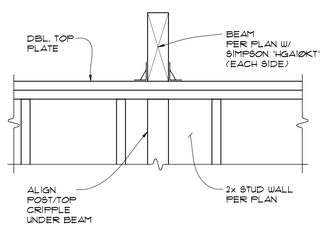

CONNECTION DETAIL 23

N WD FL 2X EX PE 1

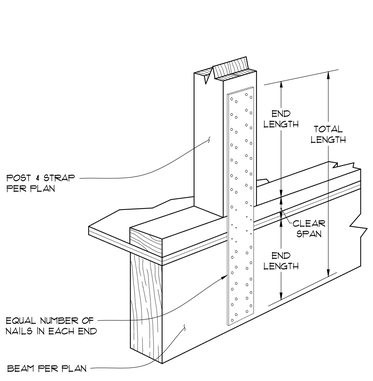

VERTICAL STRAP DETAIL 20

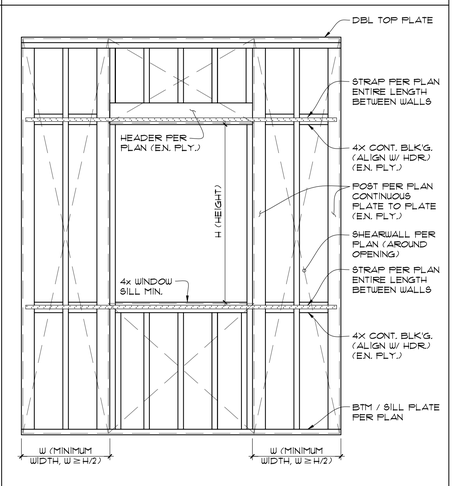

SHEARWALL STRAP DETAIL 21

N WD WL DR

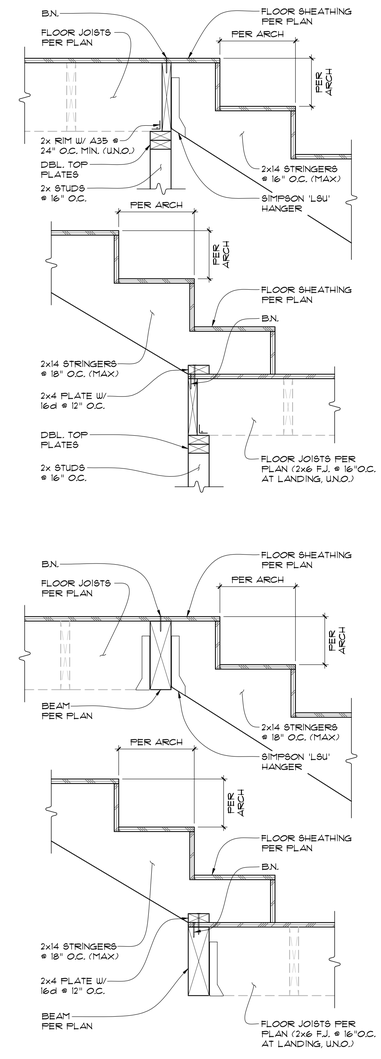

TYPICAL STAIR CONNECTIONS 18

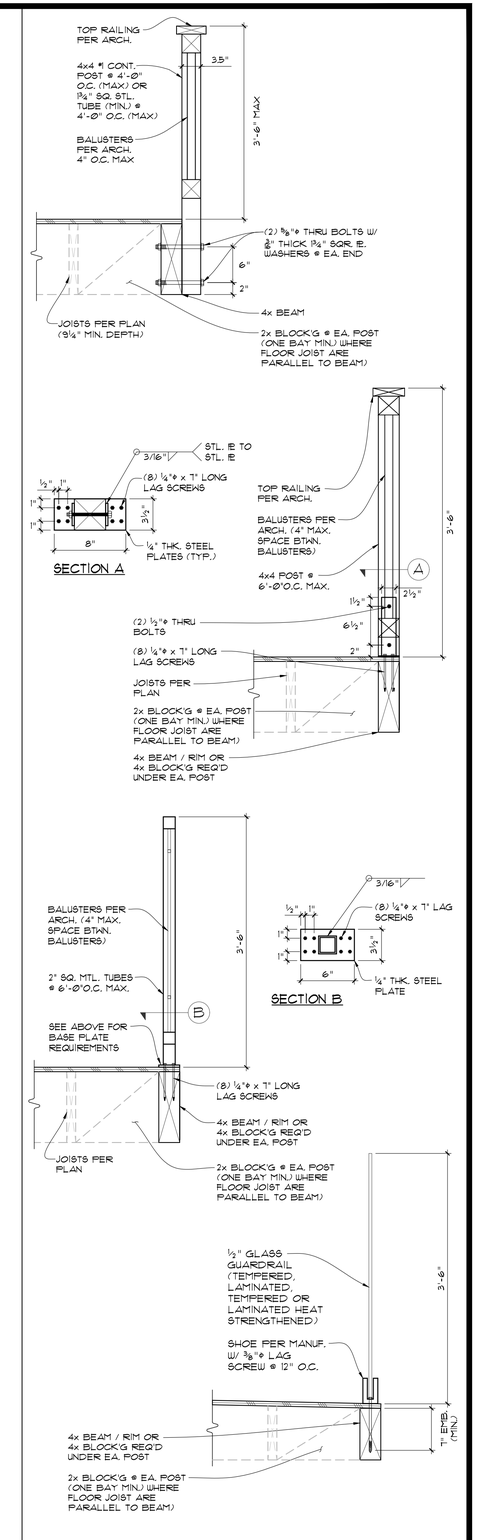

NOTE: OPEN GUARDS SHALL HAVE BALUSTERS OR ORNAMENTAL PATTERNS SUCH THAT A 4"ø SPHERE CAN NOT PASS THROUGH ANY OPENING.

TYP. GUARDRAIL DETAILS 16

Revisions:

REGISTERED PROFESSIONAL ENGINEER MILES T. LOVELACE No. C 39734 Exp. 12/31/21 STATE OF CALIFORNIA

Digitally signed by Miles Lovelace on June 30, 2020

LOVELACE ENGINEERING
Structural Engineering Services
5930 Cornerstone Ct., Ste. 100
San Diego, CA 92121
Ph. (858) 535-9111
Fax (858) 535-1989

Project Name:
NEAGLEY DEN ADDITION
2747 DALE STREET
SAN DIEGO CA, 92104

Designer:
ECO MINDED SOLUTIONS, INC.
9530 PADGETT ST. #109
SAN DIEGO CA, 92126

Job No.	J20243
Cad Ref. No:	-
Date Drawn:	06-09-2020
Date Issued:	-
Proj. Engineer:	A.M.
Drawn By:	-
Checked By:	M.T.L.
Scale:	N.T.S.

Drawing Status:
- ☐ INFORMATION DWGS. (NOT FOR CONSTRUCTION)
- ☐ PRELIMINARY DWGS. (NOT FOR CONSTRUCTION)
- ☐ DESIGN DEVELOPMENT DWGS. (NOT FOR CONSTRUCTION)
- ☐ CHECK SET (NOT FOR CONSTRUCTION)
- ☐ PROGRESS DRAWINGS (NOT FOR CONSTRUCTION)
- ☐ PLAN CHECK DRAWINGS
- ☐ BID SET DRAWINGS
- ☐ CONSTRUCTION DOCUMENTS
- ☐ OTHER

LOVELACE ENGINEERING INC. EXPRESSLY RESERVES ITS COMMON LAW COPYRIGHT AND OTHER PROPERTY RIGHTS IN THIS DOCUMENT. THIS DOCUMENT SHALL NOT BE REPRODUCED, COPIED, CHANGED OR DISCLOSED IN ANY FORM OR MANNER WHATSOEVER WITHOUT FIRST OBTAINING THE EXPRESS WRITTEN CONSENT OF LOVELACE ENGINEERING INC. © 1994

Sheet Title:
STANDARD STRUCTURAL DETAILS

Sheet Number:
SD2